CDBG FY2020
OFFICE OF COMMUNITY DEVELOPMENT
CITY OF MUNCIE

BID PACKET
for
BRIDGES - FENCE

PRE-BID CONFERENCE: Wednesday, October 14, 2020
BID DUE DATE: Wednesday, October 21, 2020

NOTICE TO BIDDERS 4

INSTRUCTIONS TO BIDDERS 5

ARTICLE 1. DEFINITIONS 5
ARTICLE 2. RECEIPT AND OPENING OF BIDS 5
ARTICLE 3. PREPARATION OF THE BID PROPOSAL 5
ARTICLE 4. SIGNATURE OF BIDDERS 6
ARTICLE 5. BIDDER TO EXAMINE SITE 7
ARTICLE 6. QUESTIONS 7
ARTICLE 7. WITHDRAWAL OF BID PROPOSAL 7
ARTICLE 8. AWARD OF CONTRACT - REJECTION OF BIDS 7
ARTICLE 9. EXECUTION OF CONTRACT - PERFORMANCE AND PAYMENT BOND 7
ARTICLE 10. INSURANCE AND LEGAL RESPONSIBILITY 8
ARTICLE 11. NOTICE TO PROCEED 9
ARTICLE 12. TAX EXEMPTIONS 9
ARTICLE 13. UNAVAILABILITY OF MATERIALS 9
ARTICLE 14. CHANGE IN SCOPE OF PROJECT 9
ARTICLE 15. CHANGE ORDERS 9
ARTICLE 16. RIGHT OF ACCESS 10
ARTICLE 17. NIGHT AND WEEKEND WORK 10
ARTICLE 18. SAFETY AND HEALTH REGULATIONS 10
ARTICLE 19. SUSPENSION OF WORK BY OWNER 10
ARTICLE 20. GENERAL CONTRACTOR'S LIABILITY 10
ARTICLE 21. INTENT OF THE CONTRACT DOCUMENTS 10
ARTICLE 22. COMPLIANCE WITH THE LAW 11
ARTICLE 23. PUBLIC RIGHTS-OF-WAY 11
ARTICLE 24. EXISTING UTILITIES 11
ARTICLE 25. UTILITY PROTECTION 11
ARTICLE 26. INTERFERENCE WITH AND PROTECTION OF STREETS 11
ARTICLE 27. PROTECTION TO PROPERTY 11
ARTICLE 28. BARRICADES 12
ARTICLE 29. PUBLIC CONVENIENCE 12
ARTICLE 30. FEDERAL LABOR STANDARDS PROVISIONS 12
ARTICLE 31. COMPLIANCE WITH EXECUTIVE ORDER 11246 12

CONSTRUCTION CONTRACT 1

PROJECT TITLE 1
WITNESSETH 1
AS PER SPECIFICATIONS 1
CONTRACT DOCUMENTS AND SPECIFICATIONS 1
SPECIFICATIONS / SUMMARY OF WORK 1
ARTICLE 1. COMPENSATION 1
ARTICLE 2. TIME OF PERFORMANCE 2
ARTICLE 3. CONTRACT SECURITY 2
ARTICLE 4. INSURANCE 2

ARTICLE 5. TERMINATION FOR DEFAULT OR CONVENIENCE 3
ARTICLE 6. COMPLIANCE WITH EXECUTIVE ORDER 11246 3
ARTICLE 7. FEDERAL LABOR STANDARDS PROVISIONS 5
ARTICLE 8. SECTION 3 CLAUSE - CONTRACTS OVER $100,000 10
ARTICLE 9. RETENTION, AUDIT, AND INSPECTION OF RECORDS 11
ARTICLE 10. RESPONSIBILITY FOR DAMAGE CLAIMS 13
ARTICLE 11. REMOVAL OF DEFECTIVE AND UNAUTHORIZED WORK 13
ARTICLE 12. WORKMANSHIP 13
ARTICLE 13. PROTECTION OF WORK AND SAFETY MEASURES 13
ARTICLE 14. PERCENTAGE OF WORK TO BE PERFORMED BY PRIME CONTRACTOR 13
ARTICLE 15. WARRANTY OF CONSTRUCTION 14
ARTICLE 16. CONTRACT DOCUMENTATION 14
ARTICLE 17. ILLEGAL IMMIGRATION REFORM AND IMMIGRATION RESPONSIBILITY 14
ARTICLE 18. DEBARMENT AND SUSPENSION 15
ARTICLE 19. USE AND REVERSION OF ASSETS 15
ACKNOWLEDGMENT 17

SCOPE OF WORK 18

SUBRECIPIENT CONTACT INFORMATION: 18
PROJECT SPECIFICATIONS 18
CONTROL OF WORK 18

MAPS & PHOTOGRAPHS 20

NOTICE TO BIDDERS

The Office of Community Development for the City of Muncie (CD) is seeking bids for various projects at multiple locations in Muncie, Indiana listed below.

Project Name	Project Location	Project Description
United Day Care Center HVAC	312 S. Vine	Replace rooftop HVAC
Bridges Fence	318 W. 8th	Replace privacy fence
Boys & Girls Club Roof	1702 S. Madison	Roof replacement
InsideOut Roof	300 N. Madison	Roof replacement
Bridge Bathroom	318 W. 8th	Bathroom build out
408 W 8th Rehab	408 W. 8th	Single-family Rehab
607 W. Charles Rehab	607 W. Charles	Multi-Unit Rehab
Senior Center Restroom Rehab	2517 W. 8th	Accessibility upgrades

All the necessary tools and materials are part of the project and to be provided by the Contractor. This project will be funded through the City's Community Development Block Grant and the winning Bidder **MUST NOT** be debarred from federal work on the **SAM.gov** website prior to contract(s) being signed. This project will be subject to the Davis Bacon Wage Act.

Bid proposals must be submitted as described below in a sealed, opaque envelope marked with the bidder's name, address and telephone number and bearing the following caption: *Bid for:* [PROJECT NAME] *Bid Opening Date:* [AS INDICATED BLEOW FOR EACH PROJECT].

Bid responses must be filed on the Bid Due Date indicated below for each separate project in the office of the City Clerk, 300 N. High St., Muncie, IN by 8:45 AM and will be opened by the Board of Public Works and Safety on the dates listed below at 9:00 AM on the Bid Due Dates listed below. Bid responses may be held by the Board of Works for a period not to exceed sixty (60) days. No bidder may withdraw his/her bid for a period of sixty days after date set for opening of bids. The Board of Works has the right to reject any and all bid responses.

Proposals shall be properly and completely executed on the proposal forms furnished by the Office of Community Development. Bid packets, including federal requirements, instructions to bidders, sample contract and bid forms, are available at the Community Development website located at **https://www.cityofmuncie.com/ muncie-community-development.htm**

There will be pre-bid conference for each project on the dates and times listed below at each project site in Muncie, IN. Please note that all communication regarding this bid, including any addenda issued, will be conducted by email only. Further questions may be submitted to **Brad King** at **bking@cityofmuncie.com**.

Project Name	Pre-Bid Date	Pre-Bid Time	Bid Due Date
United Day Care Center HVAC	10/14/2020	10:00 AM EST	10/21/2020
Bridges Fence	10/14/2020	11:00 AM EST	10/21/2020
Boys & Girls Club Roof	10/21/2020	10:00 AM EST	10/28/2020
InsideOut Roof	10/21/2020	11:00 AM EST	10/28/2020
Bridge Bathroom	10/28/2020	10:00 AM EST	11/04/2020
408 W 8th Rehab	10/28/2020	11:00 AM EST	11/04/2020
607 W. Charles Rehab	11/04/2020	10:00 AM EST	11/11/2020
Senior Center Restroom Rehab	11/04/2020	11:00 AM EST	11/11/2020

INSTRUCTIONS TO BIDDERS

ARTICLE 1. Definitions

Whenever the words hereinafter or pronouns used in their stead occur in these documents, they shall have the meaning herein given:

"Owner" shall mean the municipality, person, firm or corporation as specified in the Advertisements for Bids, for whom the work is to be done.

"Contractor" shall mean the person, firm or corporation entering into a contract with Owner to construct and complete the work herein specified, set out and shown.

"Subcontractor" shall mean a person, firm or corporation other than the Contractor supplying labor and materials or labor for work at the site of the project.

"Project Supervisor" or **"Supervisor"** shall be the Supervisors who are designated by the Owner for the work, or their duly authorized agents.

"Inspector" shall be the person who is the designated representative of the Project Supervisor and who is in charge of the inspection of the work.

"Specifications" shall include the general conditions, detail specifications, diagrams, plans and drawings.

"Contract" shall include the entire component parts of the Contract as well as the plans, drawings, wage determinations and federal requirements referred to herein.

ARTICLE 2. Receipt and Opening of Bids

2.1 The Office of Community Development (herein called the "Owner") invites bid proposals for the furnishings of all labor and materials as called for in drawings and specifications.

2.2 Bid proposals shall be submitted to the City Clerk's Office, City Hall, 300 North Street, Muncie, Indiana, on or before the date and time called for in the "Notice to Bidders".

2.3 Strict compliance will be complied with the requirements of these "Instructions to Bidders", and the instructions on the document forms. All blanks of the bid forms must be appropriately filled in.

ARTICLE 3. Preparation of the Bid Proposal

3.1 The bid proposal shall be submitted on forms that will be furnished by the Owner. The bidder shall fill in the lump sum base bid for the purpose of determining the best and lowest bid and the unit price bid amount in the event of additional work being required. These unit prices shall be used to determine the costs for changes in the work agreed to and authorized by the Owner.

3.2 Amounts shall be written with ink or typewritten in words and figures, if required. Should there be any discrepancies between words and figures indicating any amount in proposal, amount written in words shall prevail. Bids written in pencil will not be accepted.

3.3 Spaces for amount of bids not bid upon shall be filled with "NO BID" so that all blanks are filled.

3.4 The following documents and information shall constitute a Contractor's bid proposal and are to be properly executed and submitted in this order:

A. Bid Sheet, properly executed and completed

B. Request for Sub-Contractor(s), if any

C. Non-Collusion Affidavit, **notarized**

D. Certificate of Non-Segregated Facilities

E. Certification regarding debarment, suspension, and other responsibility matters

F. Section 3 Business Concern Contractor Verification

G. Section 3 Worksheet

H. **State Board of Accounts form 96 (rev. 2000)**

I. A bid of $75,000.00 or more shall be accompanied by 5% Bid Security

J. Certificate of Insurance

K. Proof of Indiana Secretary of State filing and good standing

L. Employer Identification Number

M. DUNS Number

3.5 The bid proposal shall be enclosed in a sealed opaque envelope, properly marked with the name of the company of the bidder and bearing the following caption:

Bid of: (Name of Firm)
Bid for: (Name of Project)
(Date)

ARTICLE 4. Signature of Bidders

4.1 Any bid not signed by the individual making same shall have attached to it a "Power of Attorney," evidencing authority to sign bid name of person for whom it is signed.

4.2 Any bid proposal signed for a partnership shall be signed by all partners or by an attorney-in-fact. If signed by an attorney-in-fact, there shall be attached to bid a "Power of Attorney," evidencing authority to sign bids, executed by the partners.

4.3 Any bid proposal submitted by a corporation shall have correct corporate name and the signature of the President (or other authorized officer of the corporation) and Secretary, manually written below corporate name, following the word "by" and shall have affixed the corporate seal.

4.4 Limited or qualified bid proposals will not be accepted.

ARTICLE 5. Bidder to Examine Site

All bidders shall examine the Contract Documents and construction site to acquaint themselves with the conditions under which the work is to be performed, and the existence of the obstacles which may be encountered, (above and underground) and all other relevant matters concerning work to be performed. The successful bidder will not be allowed any extra compensation by reason of any matter or thing concerning which said bidder might have fully acquainted himself because of his failure to have so acquainted himself prior to the bidding.

ARTICLE 6. Questions

All inquiries pertaining to Contract Documents shall be made to the Department, Project Inspector, or Project Supervisor. If any person submitting a bid proposal for work is in doubt as to true meaning of any part of Contract Documents, he may submit to the Department, Project Supervisor, or the designated inspector, a written request for an interpretation. Any interpretation of such Contract Documents will be made to addendum issued.

Addendum issued by the Department or the Project Supervisor during time of bidding, but not later than four (4) days before bidding time, shall be mailed or delivered to each person receiving a set of Contract Documents, and to such other prospective Bidders who shall have requested that they be furnished with a copy. All addenda shall be noted and dated in the Bid Proposal Form, and in closing the Contract, shall become a part thereof.

ARTICLE 7. Withdrawal of Bid Proposal

Any bidder may withdraw his bid proposal at any time until scheduled time for receipt of bid proposals. No bid proposal shall be withdrawn after scheduled time for receipt of bid proposals without consent of Owner for a period of 60 days.

ARTICLE 8. Award of Contract - Rejection of Bids

8.1 The Owner intends not to award the Contract to any bidder who does not furnish satisfactory evidence that he has the ability and experience in this class of work, and that he has sufficient capital and plant to enable him to procure the same successfully and to complete the work in the time named in the proposal. The Board reserves the right to reject any and all bids.

8.2 The award of Contract will be made to the lowest and/or best bidder in accordance with the requirements of Section 3 of the Housing and Urban Development Act of 1968, as amended. Under the provisions of Section 3, businesses that qualify may be eligible for preference in the awarding of contracts.

8.3 The Contract shall be deemed as having been awarded when the Owner has officially acknowledged award of the Contract.

8.4 The Owner reserves the right to reject any and all bids and to waive any informality in bids received whenever such rejections or waiver is in the interest of the Owner.

ARTICLE 9. Execution of Contract - Performance and Payment Bond

The successful bidder will be notified and required to attend a Pre-Construction Conference where the Contract shall be executed. Prior to executing the Contract, however, the successful bidder shall submit the following documents which will become a part of the Contract

Documents. Should the successful bidder fail to produce the following documents, he shall forfeit his right to form a contract with the Owner.

9.1 Contractor's Certification Concerning Labor Standards and Prevailing Wage Requirements.

9.2 Current Certificate of Insurance (see Article 10 for insurance requirements)

9.3 Contracts awarded in excess of $75,000.00 shall automatically require a One Year Performance and Payment Bond which shall be delivered by the successful bidder to the Owner at the Pre-Construction Conference. Upon execution of the Contract, the Bid Security shall be returned.

ARTICLE 10. Insurance and Legal Responsibility

10.1 The Contractor shall not commence any work until he obtains, at his own expense, all required insurance. Such insurance must have the approval of the Owner as to limit, form, and amount. The Contractor will not permit any Subcontractor to commence work on this project until the same insurance requirements have been complied with by each Subcontractor. The Contractor or Insurance Company shall furnish proof that said insurance company is bondable.

10.2 The type of insurance the Contractor is required to obtain and maintain for the full period of the Contract will be Workmen's Compensation Insurance, Comprehensive General Liability Insurance, and Builder's Risk "All-Risk" Insurance (see 10.4).

10.3 The Contractor shall carry or require that there be carried Manufacturer's and Contractor's Public Liability Insurance with limits of $100,000/$300,000 to the City of Muncie, Contractor or his Sub-Contractor against claims for injury to death of one or more persons due to fire, explosion and all other accidents which may occur or result from operations under the Contract on or off the premises. Such insurance shall cover the use of all equipment, hoists, and motor vehicles on the site or going to and from the site.

10.4 The Contractor shall furnish evidence of Insurance providing the following coverages and limits:

Coverage	**Limits**
Comprehensive General Liabilities (including Contractual)	$500,000 each person $500,000 each accident $1,000,000 aggregate
Property Damage	$500,000 each person $1,000,000 aggregate or $500,000 CSL Bodily Injury and Property Damage
Workmen's Compensation	Statutory
Employer's Liability	$250,000
Automobile Liability/Bodily Injury	$500,000 each person $500,000 each accident

Umbrella	$1,000,000

In addition, the Contractor's insurance shall name the City as an additional insured and shall hold the City harmless.

ARTICLE 11. Notice to Proceed

Contractor shall commence work immediately following the receipt of Notice to Proceed. The work of the Contract shall be completed within the period of time indicated in the Contract.

ARTICLE 12. Tax Exemptions

No state sales tax is due or payable on any material furnished to the project. A Sales Tax Exemption form will be furnished by the Department upon request.

ARTICLE 13. Unavailability of Materials

13.1 Bids must be based on the use of materials specified, subject to the provisions of any addenda issued. If the Contractor is unable to furnish or use any of the materials or equipment specified because of any order by a governmental agency limiting the manufacturer or use, or because the supply situation in the general market for such materials or equipment is affected, the Contractor shall offer substitutes therefore. The substitutes shall be suitable for the purpose, considering the factors of quality, serviceability, appearance, and maintenance. No substitute shall be used until it has been approved by the project inspector.

13.2 No consideration will be given to the use of substitutes on account of market conditions, unless the Contractor demonstrates that for the item in question, he placed his order and submitted shop drawings without delay; that he has shown due diligence in attempting to locate the item as specified; and that the unavailability is due to market conditions in general throughout the particular industry.

13.3 If substitutes are used in the work, the compensations to be paid the Contractor shall be subject to review and adjustment. As a general principle, if the Project Inspector shall determine that the substitute will be less satisfactory, the Contractor shall allow a credit to the Owner. Only under unusual circumstances shall there be an increase in compensation to the Contractor. Adjustments will be based on the cost of the appropriate items at the time the bids were opened.

ARTICLE 14. Change in Scope of Project

The Owner reserves the right to re-bid any portion of this project when alterations of design or the scope of the work is expanded to such a degree that additional costs are anticipated to exceed 10% of the Contract amount.

ARTICLE 15. Change Orders

No change order will be recognized without prior approval of the Owner. If the Contractor performs any work prior to receiving approval of the Owner, any such work will be at his own expense, and the Owner shall not consider any request for reimbursement.

ARTICLE 16. Right of Access

The bidder, if awarded the Contract for this project, agrees that the representatives of the Environmental Protection Agency, the State of Indiana, and all other regulatory agencies will have access to the work whenever it is in preparation or progress, and that the Contractor will provide facilities for such access and inspections.

ARTICLE 17. Night and Weekend Work

No night or weekend work (Saturday and Sunday) requiring the presence of a Project Supervisor Inspector will be permitted except in case of emergency, and then only to such extent as it is absolutely necessary, and with written approval of the Project Supervisor.

ARTICLE 18. Safety and Health Regulations

The successful bidder shall be responsible for all obligations prescribed as employer obligations under Chapter XVII of Title 29 Code of Federal Regulations, Part 1926, otherwise known as "Safety and Health Regulations for Construction."

ARTICLE 19. Suspension of Work by Owner

The Project Supervisor or Inspector shall have the authority to suspend the work, wholly or in part, for such period or periods as he may deem necessary due to unsuitable weather or such other conditions as are considered detrimental to carrying out the provisions of the Contract. Additionally, the work or any portion thereof may be suspended at any time at the discretion of the Project Supervisor or Project Inspector. This stop order will be followed by written notice and reason for the stoppage.

ARTICLE 20. General Contractor's Liability

Liability of Contractor for Employees: Each and every employee of the Contractor and each and every one of his Sub-contractors engaged in the said work shall for all purposes be deemed and taken to the exclusive servants of the Contractor and not for any purpose or in any manner be relieved from responsibility or liabilities on account of any fault or delay in the execution of the said work, or any part thereof, by any such employee, or any such Subcontractor, or any material men whatsoever.

ARTICLE 21. Intent of the Contract Documents

21.1 The Contract Documents, Specifications, and Instructions to Bidders are complementary and what is called for by one shall be as binding as if called for by all. The intention of the Contract Documents is to include in the Contract price of all labor and materials, water, fuel, tools, plants, equipment, light, transportation and all other expenses as may be necessary for the proper execution of the work.

21.2 In interpreting the Contract Documents, words describing material or work which have well known technical or trade meanings unless otherwise specifically defined in the Contract Documents shall be construed in accordance and with such well known meanings recognized by registered engineers and the trade.

ARTICLE 22. Compliance with the Law

The Contractor shall give all notices, pay all fees, and comply with all laws, ordinances, rules and regulations bearing on the conduct of the work.

ARTICLE 23. Public Rights-of-Way

In public thoroughfares, all operations of the Contractor, including those of temporary nature, must be confined within the applicable right-of-way limits. If the methods of construction employed by the Contractor are such as to require the use of land beyond the public thoroughfares, he shall make his own agreements with the property owners affected for the use of such additional land. The City Engineering Department shall be notified of any agreements for additional land use, and a copy of said agreements shall be provided to the Engineer upon request.

ARTICLE 24. Existing Utilities

All existing public and private utility systems which conflict with the construction of the work herein described shall be relocated or temporarily removed and replaced as required. Such relocating or temporary removal and replacement shall be accomplished at the expense of the Contractor and the work shall be done by the public or private utility unless the utility approves in writing that the work may be done by the Contractor.

ARTICLE 25. Utility Protection

Public and private utilities: It shall be the duty of the Contractor to make final and exact determination of the location and extent of all utilities and he will be liable for any expense resulting from damage to them.

ARTICLE 26. Interference with and Protection of Streets

26.1 The Contractor shall not close any portion of a street, road, or private way without obtaining permits therefore from the proper authorities and without notifying the Police Department, Fire Department, Hospitals, Ambulance Services, etc., at least seventy-two (72) hours prior to the closing. If any street or private way shall be rendered unsafe by the Contractor's operations, he shall make such repairs or provide such temporary ways or guards as shall be acceptable to the City Engineer.

26.2 Streets, roads, private ways, walks, and alleys shall be maintained passable by the Contractor at his expense, and the Contractor shall assume full responsibility for the adequacy and safety of provisions made.

26.3 Where construction necessitates the temporary removal of mailboxes used by the U.S. Postal Service, said mailboxes shall be replaced within twenty-four (24) hours after filling in excavated or disturbed areas to an equal or better condition to the satisfaction of the City Engineer.

ARTICLE 27. Protection to Property

Materials delivered shall be neatly, safely and compactly piled up along the sides of the roadway in which the improvements are located or adjacent thereto, as the Engineer may direct in such a manner as to cause the least inconvenience and damage to property and to the general public,

and not within fifteen (15) feet of any fire hydrant. Public and private drives, street crossings, and walkways shall be kept open to the greatest degree possible.

ARTICLE 28. Barricades

The Contractor shall provide adequate signs, barricades, warning lights and watchmen and take all necessary precautions for the protection of the work and the safety of the public. All barricades and obstructions shall be protected at night by suitable signal lights which shall be kept burning from sunset to sunrise. Barricades shall be of substantial construction and shall be painted such as to increase their visibility at night. Suitable warning signs shall be so placed and illuminated at night as to show in advance where construction, barricades, or detours exist. A snow fence shall be placed around all excavation at night and any time no one is working at the site.

ARTICLE 29. Public Convenience

The Contractor shall at all times so conduct his work as to ensure the least possible obstruction to traffic and inconvenience to the general public and residents in the vicinity of the work, and to ensure the protection of person and property. No road or street shall be closed to the public except with the permission of the proper authorities. Fire hydrants on or adjacent to the work shall be kept accessible to fire fighting equipment at all times.

ARTICLE 30. Federal Labor Standards Provisions

The project which the work covered by this contract pertains is being assisted by the United States of America and Federal Labor Standards Provisions will be included in this contract pursuant to the provisions applicable to such Federal Assistance. **Before calculating your bid, special attention should be given to the accompanying wage determination that lists the minimum rates at which all employees must be paid in distinct classifications.**

ARTICLE 31. Compliance with Executive Order 11246

During the performance of this contract, the Contractor agrees to comply with Executive Order 11246 which mandates that the Contractor will not discriminate against any employee or applicant because of race, creed, color, age, sex, handicap or national origin. The Contractor will take affirmative action to ensure that applicants are employed and that employees are treated during employment without regard to their race, religion, color, sex, age, handicap, familial status or national origin. The complete Executive Order will become part of the contract documents.

CONSTRUCTION CONTRACT

PROJECT TITLE

This Contract made this ____day of ____, 20_ by and between the Office of Community Development, City of Muncie, Indiana, (hereinafter referred to as the "Owner"), _____, (hereinafter referred to as the "Subrecipient"), and _____, (hereinafter referred to as the "Contractor").

WITNESSETH

That for and in consideration of the mutual covenants herewith enumerated, the Owner does hereby hire and employ the Contractor to furnish all materials, equipment and labor necessary to fully perform, and complete the construction described as follows:

_____

AS PER SPECIFICATIONS

Construction will be performed according to the plans, standard specifications, drawings and any additional specifications which are on file in the office of Community Development, City of Muncie (hereinafter referred to as CD) and will also reflect any supplemental, general, or special provisions either set out or referred to in the Contractor's bid proposal to the Owner. The Contractor will be paid upon completion of this work, when done to these specifications. Instructions to Bidders and provisions referred to herein are made a part of this Contract the same as herein fully set forth. The Owner and Contractor expressly agree that CD shall have full authority to directly enforce the terms and conditions of this Contract for and on behalf of the Owner. Additionally, they agree that CD shall possess each and every right afforded to the Owner by this Contract, as well as any other right specifically provided herein.

CONTRACT DOCUMENTS AND SPECIFICATIONS

Work to be performed shall be in accordance with drawings and specifications included with this bid packet and prepared by the Department of Community Development or their duly authorized architect(s) or engineer(s).

SPECIFICATIONS / SUMMARY OF WORK

The detailed project scope of work and specifications are included in ATTACHMENT C.

ARTICLE 1. Compensation

The Owner agrees to pay to the Contractor the sum of _$_____ () based on the estimate unit quantities at the specified unit prices stated on the Contractor's attached proposal. The Contractor's attention is drawn to the fact that the estimate of quantities of work to be done and materials to be furnished as shown on the proposal form is approximate, and is given only as a basis of calculation upon which the award of the contract is made. Final contract amount will be

DRAFT

determined by actual measured quantities of work in place by a duly authorized representative of the Engineering Department. The Contractor shall not plead misunderstanding or deception because of these quantities, or because of the character, location, or other conditions pertaining thereto. Actual quantities paid for will be at the contract unit price or prices; or otherwise as agreed upon by the Contractor or the Owner. The right is reserved for the Owner to increase or decrease any or all of the above-mentioned quantities of work or to omit certain quantities, as it may deem necessary.

ARTICLE 2. Time of Performance

The Contractor hereby agrees to commence work under this Contract within 30 days following the signing of this contract. Starting from the date of such conference, the Contractor has 30 days in order to complete the project and to remove all surplus materials and other clean-up work as so ordered by the Department.

ARTICLE 3. Contract Security

Contract Security on this contract will consist of material and payment bond. On Contracts exceeding $75,000.00 the Contractor shall furnish a performance bond in an amount of 100% of the Contract Price as security for faithful performance of the contract for a period of one year. Such security must be furnished at the Pre-Construction Conference.

ARTICLE 4. Insurance

The Contractor shall not commence any work until he obtains, at his own expense, all required insurance. Such insurance shall name the City as an additional named insured with regard to the operation(s) being performed, and insert a clause holding the City harmless. The Contractor will not permit any Subcontractor to commence work on this project until the same insurance requirements have been complied with by each Subcontractor. The Contractor shall furnish evidence of Insurance providing the following coverage and limits:

Coverage	**Limits**
Comprehensive General Liabilities (Including Contractual)	$500,000 each person $500,000 each accident $1,000,000 aggregate
Property Damage	$500,000 each person $1,000,000 aggregate Or $500,000 CSL Bodily Injury & Property Damage
Workmen's Compensation	Statutory
Employer's Liability	$250,000.00
Automobile Liability/Bodily Injury	$500,000 each person $500,000 each accident

DRAFT

Excess (Umbrella) $1,000,000

The Contractor and Subcontractor(s) are required to maintain the above insurance requirement until the project is completed and final payment is issued.

ARTICLE 5. Termination for Default or Convenience

5.1 The Department may terminate this Contract, in whole or in part, at any time by written notice to the Contractor. The Contractor shall be paid its costs, including Contract close-out costs and profit on work performed up to the time of termination. The Contractor shall promptly submit its termination claim to be paid to the Owner. If the Contractor has any property in its possession belonging to the City, the Contractor will account for the same, and dispose of it in the manner the Owner directs. The parties agree that the Owner shall not be liable for the cost of the Contractor doing business, his overhead, or salaries if this Contract is terminated.

5.2 If the Contractor fails to perform in the manner called for in this Contract, or if the Contractor fails to comply with any other provisions of this Contract, the Department may terminate this Contract for default. Termination shall be effected by serving a "Notice of Termination" on the Contractor setting forth the manner in which the Contractor is in default. The Contractor will only be paid the Contract price for services performed in accordance with the manner of performance set forth in this Contract.

5.3 In the event of a strike, fire, flood, or events which are not the fault of the Contractor, or events that make it impossible or impractical for the Contractor to complete said work on schedule, the Department, after setting up a new performance schedule, may allow the Contractor to continue work, or may treat the said events as a termination for convenience.

5.4 In accordance with 24 CFR 85.44 *Termination for Convenience*, this Agreement may also be terminated for convenience by either CD or the Contractor, in whole or in part, by setting forth the reasons for such termination, the effective date, and, in the case of partial termination, the portion to be terminated. However, if in the case of a partial termination, CD determines that the remaining portion of the award will not accomplish the purpose for which the award was made; CD may terminate the award in its entirety.

ARTICLE 6. Compliance with Executive Order 11246

During the performance of this contract, the Contractor agrees as follows:

6.1 The Contractor will not discriminate against any employee or applicant because of race, creed, color, age, sex, handicap or national origin. The Contractor will take affirmative action to ensure that applicants are employed and that employees are treated during employment without regard to their race, religion, color, sex, age, handicap, familial status or national origin. Such action shall include, but not be limited to the following: Employment, upgrading, demotion or transfer; recruitment advertising, layoff or termination, rates of pay or other forms of compensation, and selection for training, including apprenticeship. The Contractor agrees to post in conspicuous places, available to employees and applicants for employment, notices, to be provided, setting forth the provisions of this nondiscrimination clause.

DRAFT

6.2. The Contractor will, in all solicitations or advertisements for employees place by or on behalf of the Contractor, state that all qualified applicants will receive consideration for employment without regard to race, religion, color, sex, age, handicap, familial status or national origin.

6.3 The Contractor will send to each labor union or representative of workers with which he has a collective bargaining agreement of other contract or understanding, a notice advising the said labor union or worker's representatives of commitments under this section, and shall post copies of the notice in conspicuous places available to employees and applicants for employment.

6.4 The Contractor will not discriminate against any employee or applicant for employment because he or she is a disabled veteran or a veteran of the Vietnam Era in regard to any position for which the employee or applicant for employment is qualified. The Contractor agrees to take affirmative action to employ, advance in employment, and otherwise treat qualified disabled veterans and veterans of the Vietnam Era without discrimination based upon their disability or veteran status in all employment practices such as the following: employment upgrading, demotion or transfer, recruitment, advertising, layoff or termination, rates of pay or other forms of compensation, and selection for training, including apprenticeship.

6.5 The Contractor will comply with all provisions of Executive Order 11246 of September 24, 1965, and of the rules, regulations and relevant orders of the Secretary of Labor. No segregated facilities will be maintained as required by Title VI of Civil Rights Acts of 1964.

6.6 The Contractor will furnish all information and reports required by Executive Order 11246 of September 24, 1965, and by rules, regulations and orders of the Secretary of Labor, or pursuant thereto, and will permit access to his book, records, time cards, and accounts by the administering agency and the Secretary of Labor for the purposes of investigation to ascertain compliance with such rules, regulations and orders.

6.7 In the event of the Contractor's non-compliance with the non-discriminatory clauses of this Contract or with any of the said rules, regulations or orders, this Contract may be cancelled, terminated, or suspended in whole or in part and the Contractor may be declared ineligible for further grantee contracts or Federally assisted construction contracts in accordance with procedures authorized in Executive Order 11246 of September 24, 1965, and such other sanctions may be imposed and remedies invoked as provided in Executive Order 11246 of September 24, 1965, or by rule, regulations or order, of the Secretary of Labor, or as otherwise provided by law.

6.8 The Contractor will include the portion of the sentence immediately preceding paragraph (1) and the provisions of paragraphs (1) through (8) in every subcontract or purchase order unless exempted by rules, regulations or orders of the Secretary of Labor issued pursuant to Section 204 of Executive Order 11246 of September 24, 1965, so that such provisions will be binding upon each subcontractor or vendor. The Contractor will take such action with respect to any subcontract or purchase order as the administering agency may direct as a means of enforcing such provisions, including sanctions for noncompliance. Provided, however, that in the event a contractor becomes involved in, or is threatened with, litigation with a subcontractor or vendor as a result of such direction by the administering agency, the Contractor may request the United States to enter into such litigation to protect the interests of the United States.

DRAFT

ARTICLE 7. Federal Labor Standards Provisions

The most recent labor wage decision is included in ATTACHMENT B.

7.1 **Applicability.** The project to which the work covered by this Contract pertains is being assisted by the United States of America and the following Federal Labor Standards Provisions are included in this Contract pursuant to the provisions applicable to such Federal Assistance.

7.2 **Minimum Wage Rates and Laborers.** All laborers and mechanics employed under the work covered by this Contract shall be paid unconditionally and not less than once each week. This will be without subsequent deductions as are permitted by the applicable regulations issued by the Secretary of Labor, United States Department of Labor pursuant to the Anti-kickback Act hereinafter identified. They must be paid the full amount due at time of payment computed at wage rates not less than those contained in the wage determination decision of said Secretary of Labor (a copy of which is attached and herein incorporated by reference). This amount must be paid regardless of any contractual relationship, which may be alleged to exist between the Contractor or any subcontractor and such laborers and mechanics. For the purpose of this clause, contributions made or costs reasonably anticipated under Section 1(b)(2) of the Davis-Bacon Act on behalf of laborers or mechanics are considered wage paid to such laborers or mechanics, subject to the provisions of Section 5.5 (a)(1)(iv) of Title 29, Code of Federal Regulations. Also for the purpose of this clause, regular contributions made or costs incurred for more than a weekly period, are deemed to be consecutively made or incurred during such weekly periods.

7.3 **Underpayment of Wages or Salaries.** The Department reserves the right to request canceled checks or other supporting documentation to verify that amounts reflected on certified payrolls were indeed paid to employees. When requested, such documentation will be presented to the Board prior to release of final payment. In case of underpayment of wages by the Contractor or subcontractor to laborers or mechanics employed by the Contractor or subcontractor upon the work covered by this Contract, the Department, in addition to such other rights as may be afforded it under this Contract, <u>shall withhold from the Contractor, out of any payments due the Contractor, so much thereof as the Department may consider necessary to pay such laborers or mechanics the full amount of wages required by this Contract.</u> The amount so withheld may be disbursed by the Department, for and on account of the Contractor or the subcontractor (as may be appropriate) to the respective laborers or mechanics to whom the same is due or on their behalf to plans, funds, or programs for any type of fringe benefit prescribed in the applicable wage determination.

7.4 **Anticipated Costs of Fringe Benefits.** If the Contractor does not make payments to a trustee or other third party, he/she may consider as part of the wages of any laborer or mechanic the amount of any costs reasonable anticipated in providing fringe benefits under a plan or program of a type expressly listed in the wage determination decision of the Secretary of Labor which is part of this Contract; provided, however, the Secretary of Labor has found, upon the written request of the Contractor, that the applicable standards of the Davis-Bacon Act have been met. The Secretary of Labor may require the Contractor to set aside in a separate account assets for the meeting of obligations under the plan or program. A copy of any finding made by the Secretary of Labor in respect to fringe benefits being provided by

DRAFT

the Contractor must be submitted to the Board with the first payroll filed by the Contractor subsequent to receipt of the findings.

7.5 **Overtime Compensation Required by Contractor Work Hours and Safety Standards Act (76 Stat. 357-360: Title U.S.C., Section 327-332)**

A. **Overtime Requirements.** No Contractor or subcontractor contracting for any part of the Contract work which may require or involve the employment of laborers of mechanics, including watchmen and guards, shall require or permit any laborer or mechanic in any work week in which he is employed on such work to work in excess of forty (40) hours in such work week unless such laborer or mechanic receives compensation at a rate <u>not less than one and one-half times the basic rate of pay for all hours worked in excess of 40 hours in such work week,</u> as the case may be.

B. **Violation.** Liability for unpaid wage liquidated damages. In the event of any violation of the clause set forth in paragraph (a) the Contractor and any subcontractor responsible therefore shall be liable to: (1) Any affected employee for his/her unpaid wages, and (2) The United States for liquidated damages. Such liquidated damages shall be computed with respect to each individual laborer and mechanic employed in violation of the clause set forth in paragraph (a) in the sum of $10.00 for each calendar day on which such employee was required or permitted to work in excess of the standard work-week of forty (40) Hours without payment of the overtime wages required by the clause set forth in paragraph (a). This amount may be deducted from final payment to the Contractor.

C. **Withholding for Liquidated Damages.** The Owner shall withhold or cause to be withheld, from any monies payable on account of work performed by the Contractor or subcontractor, such sums as may administratively be determined to be necessary to satisfy any liabilities of such Contractor or subcontractor for liquidated damages as provided in the clause set forth in paragraph (b).

D. **Subcontractors.** The Contractor shall insert in any subcontracts the clauses set forth in paragraphs (a)(b) of this Section and also a clause requiring the subcontractor to include these clauses in any lower tier subcontracts which they may enter into, together with a clause requiring this insertion in any further subcontract that may in turn be made.

7.6 **Employment of Apprentices/Trainees**

A. **Apprentices.** Apprentices will be permitted to work at less than the predetermined rate for the work they performed when they are employed and individually registered with the U.S. Department of Labor, Manpower Administration, Bureau of Apprenticeship and Training, or with a State Apprenticeship Agency recognized by the Bureau, or if a person is employed in his first ninety (90) days of probationary employment as an apprentice in such an Apprenticeship Agency (where appropriate) to be eligible for probationary employment as an apprentice. The allowable ratio of apprentices to journeymen in any craft classification shall not be greater than the ratio permitted to the Contractor as to his/her entire work force under the registered program. Any employee listed on a payroll at an apprentice wage rate, who is not a trainee as defined in subdivision (2) of this subparagraph or is not registered of otherwise employed as stated above, shall be paid the wage rate determined by the

DRAFT

Secretary of Labor for the classification of work he/she actually performed. The Contractor or subcontractor will be required to furnish to the contracting officer or a representative of the Wage Hour Division of the U.S. Department of Labor written evidence of the registration of his/her program and apprentices as well as the appropriate ratios and wage rates (expressed in percentages of the journeymen hourly rates) for the area of construction prior to using any apprentices on the Contract work. The wage rate paid to apprentices shall be not less than the appropriate percentage of the journeymen's rate contained in the applicable wage determination.

B. **Trainees.** Except as provided in 29 CFR 5.15, trainees will not be permitted to work at less than the predetermined rate for the work performed unless they are employed pursuant to and individually registered in a program which has received prior approval, evidenced by formal certification, by the U.S. Department of Labor, Manpower Administration, Bureau of Apprentice and Training. The ratio of trainees to journeymen shall not be greater than permitted under the plan approved by the Bureau of Apprenticeship and Training. Every trainee must be paid at not less than the rate specified in the approved program for his/her level of progress. Any employee listed on the payroll at a trainee rate who is not registered in participating in a training plan approved by the Bureau of Apprenticeship and Training shall be paid not less than the wage rate determined by the Secretary of Labor for the classification of work he actually performed. The Contractor or subcontractor will be required to furnish the contracting officer or a representative of the Wage-Hour Division of the U.S. Department of Labor written evidence of the certification of his/her program, the registration of the trainees, and the ratio and wage rates prescribed in that program. In the event the Bureau of Apprenticeship and Training withdraws approval of a training program, the Contractor will no longer be permitted to utilize trainees at less than the applicable predetermined rate for the work performed until an acceptable program is approved.

C. **Equal Employment Opportunity.** The utilization of apprentices, trainees and journeymen under this part shall be in conformity with the equal employment opportunity requirements of Executive Order 11246, as amended, and 29 CFR Part 30.

7.7 **Employment of Certain Persons Prohibited.** No person under the age of sixteen years and no person who, at the time, is serving sentence in a penal or correctional institution shall be employed on work covered by this Contract.

7.8 **Regulations Pursuant to So-Called "Anti-Kickback Act".** The Contractor shall comply with the applicable regulations of the Secretary of Labor, United States Department of Labor, made pursuant to the So-called "Anti-Kickback Act" of June 13, 1934, *48 Stat/ 948" 862; Title 40 U.S.C., Section 276(c), and any amendments or modifications thereof shall cause appropriate provisions to be inserted in subcontracts to ensure compliance therewithal by all subcontractors subject thereto, and shall be responsible for the submission of affidavits required by subcontractors thereunder, except as for the submission of affidavits required by subcontractors thereunder, except as said Secretary of Labor may specifically provide for reasonable limitations, variations, tolerances, and exemptions form the requirements thereof.

DRAFT

7.9 **Employment of Laborers for Mechanics not Listed in Aforesaid Wage Determination Decision.** Any class of laborer or mechanic which is not listed in the wage determination and which is to be employed under the Contract will be classified or reclassified conformably to the wage determination by the Board and a report of the action taken shall be submitted by the Board through the Secretary of Housing and Urban Development, to the Secretary of Labor, United States Department of Labor. In the event the interested parties cannot agree on particular class of laborers and mechanics to be used, the question accompanied by the recommendation of the Board shall be referred, through the Secretary of Housing and Urban Development, to the Secretary of Labor for final determination.

7.10 **Fringe Benefits not expressed as Hourly Wage Rates.** The Owner shall require, whenever the minimum wage rate prescribed in the Contract for a class of laborers or mechanics includes a fringe benefit which is not expressed as an hourly wage rate and the Contractor is obligated to pay cash equivalent of such a fringe benefit, an hourly cash equivalent thereof to agree upon a cash equivalent to the fringe benefit, the question, accompanied by the recommendation of the Board, shall be referred, through the Secretary of Housing and Urban Development, to the Secretary of Labor for determination.

7.11 **Posting Wage Determination Decisions and Authorized Wage Deduction.** The applicable wage poster of the Secretary of Labor, United States Department of Labor, and the applicable wage determination decisions of said Secretary of Labor with respect to the various classifications of laborers and mechanics employed and to be employed upon the work covered by this Contract, and a statement showing all deductions, if any, in accordance with the provisions of this Contract, to be made from wages actually earned by persons so employed in such classifications, shall be posted at appropriate conspicuous points at the site of the work.

7.12 **Complaints, Proceedings, or Testimony by Employees.** No laborer or mechanic to whom the wage, salary, or other labor standards provisions of this Contract are applicable shall be discharged or in any other manner discriminated against by the Contractor or any subcontractor because such employee filed any complaint or instituted or caused to be instituted any proceeding or has testified or is about to testify in any proceeding under or relating to the labor standards applicable under this Contract to his/her employer.

7.13 **Claims and Disputes Pertaining to Wage Rates.** Claims and disputes pertaining to wage rates or to classifications of laborers and mechanics employed upon the work covered by this Contractor shall be promptly reported by the Contractor in writing to the Department for referral by the latter to the Secretary of Housing and Urban Development to the Secretary of Labor, United States Department of Labor, whose decision shall be final with respect thereto.

7.14 **Questions Concerning Certain Federal Statutes and Regulations.** All questions arising under this Contract which relate to the application or interpretation of (a) the aforesaid Anti-Kickback Act, (b) the Contract Work Hours and Safety Standards Act, (c) the aforesaid Davis-Bacon Act, (d) the regulations issued by the Secretary of Labor, United States Department of Labor, pursuant to said Acts, or (e) the labor standards provisions of any other pertinent Federal statute, shall be referred, through the Department and the Secretary of Housing and Urban Development, to the Secretary of Labor, United States Department of Labor, for said Secretary's appropriate ruling or interpretation which shall be authoritative and may be relied upon for the purposes of this Contract.

DRAFT

7.15 **Payrolls and Basic Payroll Records of Contractor and Subcontractors.** The Contractor and each subcontractor shall prepare his/her payrolls on forms satisfactory to and in accordance with instructions to be furnished by the Owner. The Contractor shall submit weekly to the Department certified copies of all payrolls of the Contractor and the subcontractors, it being understood that the Contractor shall be responsible for the submission of copies of payrolls of all subcontractors. Each such payroll shall contain the "Weekly Statement of Compliance" set forth in Section 3.3 of title 29, Code of Federal Regulations. The payrolls, time cards, and basic payroll records of the Contractor and each subcontractor covering all laborers and mechanics employed upon the work covered by the Contract shall be maintained during the course of the work and preserved for a period of three years thereafter. Such payrolls and basic payroll records shall contain the name and address of each such employee, his/her correct classification(s), rate of pay (including rates of contributions or costs anticipated of the types described in Section 1 (b)(2) of the Davis-Bacon Act), daily and weekly number of hours worked in each classification, deductions made, and actual wage paid. In addition, whenever the Secretary of Labor has found under Section 5.5 (a)(1)(iv) of Title 29, Code of Federal Regulations, that the wages of any laborer or mechanic include the amount of any costs reasonably anticipated in providing benefits under a plan or program described in Section 1 (b)(2)(b) of the Davis-Bacon Act, the Contractor or subcontractor shall maintain records which show that the commitment to provide such benefits is enforceable, that the plan or program is financially responsible, and that the plan or program has been communicated in writing to the laborers or mechanics affected, and records which show the costs anticipated or the actual cost incurred providing benefits. The Contractor and each subcontractor shall make his employment records and time cards with respect to persons employed by him/her under the work covered by this Contract, available for inspection by authorized representatives of the Secretary of Housing and Urban Development, the Board and U.S. Department of Labor. Such representatives shall be permitted to interview employees of the Contractor or of any subcontractor during working hours on the job. Such interviews shall be sufficient in scope to resolve satisfactorily questions concerning compliance.

7.16 **Specific Coverage of Certain Types of Work by Employees.** The transporting of materials and supplies to or from the site of the Project to which this Contract pertains by employees of the Contractor or of any subcontractor, and the manufacturing of furnishing of materials, articles, supplies, or equipment on the site of the Project to which this Contract pertains by persons employed by the Contractor or by any subcontractor, shall, for the purposes of this Contract, and without limiting the generality of the foregoing provisions of this Contract, be deemed to be work to which these Federal Labor Standards Provisions are applicable.

7.17 **Ineligible Contractors.** The Contractor shall not subcontract any part of the work covered by this Contract or permit subcontracted work to be further subcontracted without the Departments prior written approval of the subcontractor. The Owner will not approve any subcontractor for work covered by this Contract who is at the time ineligible under the provisions of any applicable regulations issued by the Secretary of Labor, United States Department of Labor, of the Secretary of Housing and Urban Development, to receive an award of such Contract.

7.18 **Provisions to be Included in Certain Subcontracts.** The Contractor shall include or cause to be included in each subcontract covering any of the work covered by this Contract, provisions which are consistent with these Federal Labor Standards Provisions and also a clause

DRAFT

requiring the subcontractors to include such provisions in any lower tier subcontracts which they may enter into, together with a clause requiring such insertion in any further subcontracts that may in turn be made.

7.19 **Breach of Foregoing Federal Labor Standards Provision.** In addition to the causes for termination of this Contract as herein elsewhere set forth, the Department reserves the right to terminate this Contract if the Contractor or any Subcontractor whose subcontract covers any of the work covered by this Contract shall breach any of the Federal Labor Standards Provisions. A breach of these Labor Standards Provisions may also be grounds for debarment as provided by the applicable regulations issued by the Secretary of Labor, United States Department of Labor.

ARTICLE 8. Section 3 Clause - Contracts over $100,000

8.1 The work to be performed under this contract is subject to the requirements of section 3 of the Housing and Urban Development Act of 1968, as amended, 12 U.S.C. 1701u (section 3). The purpose of section 3 is to ensure that employment and other economic opportunities generated by HUD assistance or HUD-assisted projects covered by section 3, shall, to the greatest extent feasible, be directed to low- and very low-income persons, particularly persons who are recipients of HUD assistance for housing.

8.2 The parties to this contract agree to comply with HUD's regulations in 24 CFR part 135, which implement section 3. As evidenced by their execution of this contract, the parties to this contract certify that they are under no contractual or other impediment that would prevent them from complying with the part 135 regulations.

8.3 The contractor agrees to send to each labor organization or representative of workers with which the contractor has a collective bargaining agreement or other understanding, if any, a notice advising the labor organization or workers' representative of the contractor's commitments under this section 3 clause, and will post copies of the notice in conspicuous places at the work site where both employees and applicants for training and employment positions can see the notice. The notice shall describe the section 3 preference, shall set forth minimum number and job titles subject to hire, availability of apprenticeship and training positions, the qualifications for each; and the name and location of the person(s) taking applications for each of the positions; and the anticipated date the work shall begin.

8.4 The contractor agrees to include this section 3 clause in every subcontract subject to compliance with regulations in 24 CFR part 135, and agrees to take appropriate action, as provided in an applicable provision of the subcontract in this section 3 clause, upon a finding that the subcontractor is in violation of the regulations in 24 CFR part 135. The contractor will not subcontract with any subcontractor where the contractor has notice or knowledge that the subcontractor has been found in violation of the regulations in 24 CFR part 135.

8.5 The contractor will certify that any vacant employment positions, including training positions, that are filled (1) after the contractor is selected but before the contract is executed, and (2) with persons other than those to whom the regulations of 24 CFR part 135 require employment opportunities to be directed, were not filled to circumvent the contractor's obligations under 24 CFR part 135.

DRAFT

8.6 Noncompliance with HUD's regulations in 24 CFR part 135 may result in sanctions, termination of this contract for default, and debarment or suspension from future HUD assisted contracts.

8.7 With respect to work performed in connection with section 3 covered Indian housing assistance, section 7(b) of the Indian Self-Determination and Education Assistance Act (25 U.S.C. 450e) also applies to the work to be performed under this contract. Section 7(b) requires that to the greatest extent feasible (i) preference and opportunities for training and employment shall be given to Indians, and (ii) preference in the award of contracts and subcontracts shall be given to Indian organizations and Indian-owned Economic Enterprises. Parties to this contract that are subject to the provisions of section 3 and section 7(b) agree to comply with section 3 to the maximum extent feasible, but not in derogation of compliance with section 7(b).

ARTICLE 9. Retention, Audit, and Inspection of Records

9.1 The Subrecipient and Contractor shall maintain all records required by the Federal regulations specified in 24 CFR 570.506 that are pertinent to the activities to be funded under this Agreement. Such records shall include but not be limited to:

A. Records providing a full description of each project undertaken, including work write-ups, picture of project asset or area, documentation on all necessary licenses and permits, and site visit/inspection reports (including final inspection);

B. Records demonstrating clientele eligibility for services provided, including, but not limited to, application, client name, address, number of household members, verification of income of all household members age 18 or older, percent of median income according to current published HUD Income Limits for Muncie MSA,

C. Records verifying property ownership, Beacon Report, current property taxes and sewage, proof of insurance;

D. Records documenting activities and services provided daily, such as client records and staff time cards or other CD-approved staff time records; When Subrecipient staff have work time unrelated to this contract and paid by other funding sources, time and payroll records shall demonstrate that funds from this contract are only paying for services covered herein.

E. Records to document demographics of program beneficiaries, including race and ethnicity.

F. Records documenting compliance with the fair housing and equal opportunity components of the CDBG program, including records of persons denied services and reason(s);

G. Financial records as required by 24 CFR 570.502, and 2 CFR 200.327 (formerly 24 CFR 84.21–28), and record of disbursements from all funding sources for services under this Agreement; and

H. Other records necessary to document compliance with Subpart K of 24 CFR Part 570.

9.2 The Subrecipient and Contractor shall retain all financial records, supporting documents, statistical records, and all other records pertinent to the Agreement for a period of four (4) years. The retention period begins on the date of the submission of CD's annual performance

DRAFT

and evaluation report to HUD in which the activities assisted under the Agreement are reported on for the final time.

A. Notwithstanding the above, if there are claims, litigation, audits, negotiations or other actions that involve any of the records cited and that have started before the expiration of the four-year period, then such records must be retained until completion of the actions and resolution of all issues, or the expiration of the four-year period, whichever occurs later.

9.3 The Subrecipient and Contractor understand that client information collected under this contract is private and the use or disclosure of such information, when not directly connected with the administration of CD's or Subrecipient's or Contractor's responsibilities with respect to services provided under this contract, is prohibited by the Privacy Act of 1974 as amended, unless written consent is obtained from such person receiving service and, in the case of a minor, that of a responsible parent/guardian.

9.4 The Subrecipient's and Contractor's obligation to CD shall not end until all close-out requirements are completed. Activities during this close-out period shall include, but are not limited to: making final payments, disposing of program assets (including the return of all unused materials, equipment, unspent cash advances, program income balances, and accounts receivable to CD), submission of final Subrecipient and Contractors reports to CD, and determining the custodianship of records. Notwithstanding the foregoing, the terms of this Agreement shall remain in effect during any period that the Subrecipient and/or Contractor has control over CDBG funds, including program income.

9.5 All Subrecipient and Contractor records with respect to any matters covered by this Agreement shall be made available to CD, grantor agency, the U.S. Department of Labor, the Comptroller General of the United States or any of their authorized representatives, or Indiana State Board of Accounts at any time during normal business hours, as often as deemed necessary, to audit, examine, and make excerpts or transcripts of all relevant data. Any deficiencies noted in audit reports must be fully cleared by the Subrecipient and/or Contractor within 30 days after receipt by the Subrecipient of written notice thereof. Failure of the Subrecipient to comply with the above audit requirements will constitute a violation of this contract and may result in the withholding of future payments and/or debarment. The Subrecipient hereby agrees to have an annual agency audit conducted in accordance with current City policy concerning Subrecipient audits and OMB Circular A-133.

A. A-133 AUDIT REQUIREMENTS: Nonprofit agencies for fiscal years that start after 12/21/2003, in accordance with the Office of Management and Budget Circular A-133, the Federal Government requires that organizations expending $500,000 or more in Federal financial assistance in a fiscal year must secure audit. For fiscal years that start after 12/31/2014, the Federal Government requires that organizations expending $750,000 or more in Federal financial assistance in a fiscal year must secure an audit. All Federal Funds received by the organization, whether directly from a Federal agency or passed through a state or local government or some nonprofit organizations are counted toward the $500,000/$750,00 threshold. If the Borrower is required to conduct an audit in accordance with either OMB Circular A-128 or OMB Circular A-133, the following language should be included in the request for audit proposals and/or

DRAFT

engagement letter: "This audit is to be conducted in accordance with Government Auditing Standards and OMB Circular A-133 (or A-128, as appropriate)".

A copy of the audited financial statements and the auditor's opinion letter should be submitted to the Department within forty-five (45) days of their completion.

ARTICLE 10. Responsibility for Damage Claims

The Contractor shall save and hold harmless the City and its officers, agents and employees from and against all suits or claims that may be based upon alleged injury to any person or property that may occur, or may be alleged to have occurred, in the course of the performance of this Contract by the Contractor, whether such claims shall be made by an employee of the Contractor; and the charges of attorneys and all other costs and other expenses arising therefrom or incurred in connection therewith; and if any judgment shall be rendered against the City or any of its officers, and expenses, satisfy and discharge the same.

ARTICLE 11. Removal of Defective and Unauthorized Work

11.1 **Defective Work** - Whenever inspections show that portions of the work were not constructed in compliance with the terms of this Contract or specifications, the Owner will require the Contractor to remove and replace such portions, and any expense incurred by such correction will be borne by the Contractor.

11.2 **Unauthorized Work** - Work done beyond the plans or as otherwise given, will be considered unauthorized and at the expense of the Contractor, and will not be paid for by the Owner. Work so done may be ordered removed and replaced at the Contractor's expense. Should the Contractor fail to remove or renew defective material or work, or unauthorized work, within the time specified, the Owner shall have authority to cause such work to be done at the Contractor's expense, or to default this Contract.

ARTICLE 12. Workmanship

Contractor shall have competent supervision on the job at all times to direct the work. The construction methods used and workmanship performed shall conform to the best-accepted practice and specification for the work to be performed.

ARTICLE 13. Protection of Work and Safety Measures

Contractor shall use care and diligence and shall see that all work performed shall at all times be guarded and protected from any and all loss or damage until the work done is accepted by the Owner. Any loss of or damage to the work performed prior to its acceptance by the Owner due to Contractor's failure to properly guard or protect such work shall be made good by Contractor at his own expense.

ARTICLE 14. Percentage of Work to be Performed by Prime Contractor

At least 51% of this Contract must be performed by the Prime Contractor with whom this Contract is made.

DRAFT

ARTICLE 15. Warranty of Construction

In addition to any other warranties set out elsewhere in this Contract, the Contractor warrants that the work performed under this Contract conforms to the Contract requirements and is free of any defect of equipment, material, or design furnished, or workmanship performed by the Contractor or any of his subcontractors or suppliers at any tier. Such warranty shall continue for a period of one year from the date of final acceptance of the work, but with respect to any part of the work of which the Owner takes possession and use, such warranty shall start on the date of possession. Under this warranty, the Contractor shall remedy at his own expense any such failure to conform to Contract requirements or any such defect of equipment, material, workmanship or terms of this clause. The Contractor's warranty with respect to work repaired or replaced hereunder will run for one year from the date of such repair or replacement.

15.1 The Owner shall notify the Contractor in writing within a reasonable time after the discovery of any failure, defect, or damage.

15.2 Should the Contractor fail to remedy any failure, defect or damage described in Article 10 within a reasonable time (as determined by the Owner) after receipt of notice thereof, the Owner shall have the right to replace, repair, or otherwise remedy such failure, defect, or damage at the Contractor's expense and to recover such cost from the Contractor.

15.3 In addition to the other rights and remedies provided by this clause, all subcontractor, manufacturer and supplier warranties, expressed or implied, respecting any work and/or materials shall, at the direction of the Owner, be enforced by the Contractor for the benefit of the Owner. In such case, if the Contractors warranty under Article 11 above should expire prior to the extended warranties, the Contractor shall execute such warranties with the Owner and its successors named in the warranty provisions.

15.4 Notwithstanding any other provision of this clause, unless such a defect is caused by the negligence of the Contractor or his subcontractors or suppliers at any tier, the Contractor shall not be liable for the repair or any damage which results from such defect in Owner-furnished material or design.

15.5 The Warranty specified herein shall not limit the Owner's rights under this Contract with respect to latent defects, gross mistake or fraud.

ARTICLE 16. Contract Documentation

The Contractor shall furnish upon request, any documentation relating to his performing as a Contractor or Subcontractor under this Contract. The requested information may be, but is not limited to the following: payroll records, material invoices, subcontract agreements with pertinent attachments, and Section 3 Compliance documentation.

ARTICLE 17. Illegal Immigration Reform and Immigration Responsibility

The Contractor understands and agrees that it is required to enroll in and verify the work eligibility status of all employees hired after the date of this contract through the E-verify program. This requirement shall be waived if the E-Verify program ceases to exist. For the purposes of this paragraph, the E-Verify program means the electronic verification of work authorization program of the Illegal Immigration Reform and Immigration Responsibility Act of 1996 (P.L. 104-208), Division C, Title IV, s. 403 (a), as amended, operated by the United States Department of Homeland

DRAFT

Security or a successor work authorization program designated by the United States Department of Homeland Security or other federal agency authorized to verify the work authorization status of newly hired employees under the Immigration Reform and Control Act of 1986 (P.L. 99-603). An authorized representative of the Contractor has signed the affidavit attached hereto concerning the employment of unauthorized.

ARTICLE 18. Debarment and Suspension

A contract award (see 2 CFR 180.220) must not be made to parties listed on the government wide Excluded Parties List System in the System for Award Management (SAM), in accordance with the OMB guidelines at 2 CFR 180 that implement Executive Orders 12549 (3 CFR Part 1986 Comp., p. 189) and 12689 (3 CFR Part 1989 Comp., p. 235), "Debarment and Suspension." The Excluded Parties List System in SAM contains the names of parties debarred, suspended, or otherwise excluded by agencies, as well as parties declared ineligible under statutory or regulatory authority other than Executive Order 12549. To do this the Contractor must go to **www.sam.gov**, print off pages showing its contractors and sub-contractors are or are not debarred, suspended, proposed for debarment, declared in-eligible, or voluntarily excluded from participating in this transaction by the Department of any Federal Agency before any work can begin on a project.

ARTICLE 19. Use and Reversion of Assets

The use and disposition of real property and equipment under this Agreement shall be in compliance with the requirements of 2 CFR Part 200 24 (formerly CFR Part 84) and 24 CFR 570.502, 570.503, 570.504, and 570.505, as applicable, which include but are not limited to the following:

19.1 The Subrecipient shall transfer to the Grantee any CDBG funds on hand and any accounts receivable attributable to the use of funds under this Agreement at the time of expiration, cancellation, or termination.

19.2 When real property within the subrecipient's control which was acquired or improved in whole or in part using CDBG funds in excess of $25,000. These standards shall apply from the date CDBG funds are first spent for the property until five (5) years after closeout of an entitlement recipient's participation in the entitlement CDBG program or, with respect to other recipients, until five (5) years after the closeout of the grant from which the assistance to the property was provided.

A. A subrecipient may not change the use or planned use of any such property (including the beneficiaries of such use) from that for which the acquisition or improvement was made unless the recipient provides affected citizens with reasonable notice of, and opportunity to comment on, any proposed change, or

1. The new use of such property qualifies as meeting one of the national objectives in § 570.208 and is not a building for the general conduct of government; or

DRAFT

2. The subrecipient determines, after consultation with affected citizens, that it is appropriate to change the use of the property to a use which does not qualify under section (A)(1) of this article, it may retain or dispose of the property for the changed use if the recipient's CDBG program is reimbursed in the amount of the current fair market value of the property, less any portion of the value attributable to expenditures of non-CDBG funds for acquisition of, and improvements to, the property.

B. If the change of use occurs after closeout, the provisions governing income from the disposition of the real property in § 570.504(b)(4) or (5), as applicable, shall apply to the use of funds reimbursed.

C. The Subrecipient must have or develop procedures for managing equipment (including replacement equipment), whether acquired in whole or in part under a Federal award, until disposition takes place will, as a minimum, meet the following requirements:

1. Property records must be maintained that include a description of the property, a serial number or other unique identification number, the source of funding for the property, who holds title, the acquisition date, and cost of the property, percentage of Federal participation in the project costs for the Federal award under which the property was acquired, the location, use and condition of the property, and any ultimate disposition data including the date of disposal and sale price of the property.

D. A control system must be developed to ensure adequate safeguards to prevent loss, damage, or theft of the property. Any loss, damage, or theft must be investigated.

E. Following the reimbursement of the CDBG program in accordance with section (A)(2) of this article, the property no longer will be subject to any CDBG requirements.

DRAFT

ACKNOWLEDGMENT

IN WITNESS WHEREOF, the Parties have executed this contract as of the date first written above.

MUNICIPALITY

Name:

Title: Director

Department: Office of Community Development

Signature: _____

Date: _____

SUBRECIPIENT

Name:

Title:

Organization:

Signature: _____

Date: _____

CONTRACTOR

Name:

Title:

Company:

Signature: _____

Date: _____

BOARD OF PUBLIC WORKS AND SAFETY

Name:

Title: President

Signature: _____

Date: _____

Name:

Title: Vice President

Signature: _____

Date: _____

Name:

Title: Secretary

Signature: _____

Date: _____

DRAFT

SCOPE OF WORK

SUBRECIPIENT CONTACT INFORMATION:

Ryan Remington

318 W. 8th St.

Muncie, IN 47302

(765) 282-3948

bcsmuncieresources@gmail.com

PROJECT SPECIFICATIONS

Project work, specifications, and drawings are included in **ATTACHMENT C**.

CONTROL OF WORK

1. All work performed and materials furnished shall be in conformance with the MUNCIE MUNCIPIAL BUILDING CODES (CHAPTER 152).

2. COOPERATION WITH SUBRECIPIENT: The Contractor shall notify the subrecipient contact prior to work notifying of when work will begin.

3. No additional allowance or compensation of' any kind will be made on this contract for any delay, inconvenience or suspension of, construction caused by the work or relocation and/or reconstructing the existing facilities either at a temporary location or at their permanent location by any utility companies involved, except as otherwise provided for herein.

4. INCREASED OR. DECREASED QUANTITIES OF WORK: The right is reserved for the Project Supervisor to make such alterations in the plans, or in the character or quantity of the work, as may, be necessary or desirable from time to time during the progress of the work. In this specification a major contract item shall be construed to be any item in the proposal constituting more than 5 percent of the amount of' the contract, and a minor contract item shall be construed to be any item in the proposal constituting 5 percent or less of the amount of the contract.

5. No single major contract item shall be changed more than 10 percent from, the, original contract quantity without a negotiated unit price having been agreed upon for the item involved. Any minor item may be decreased by any amount, or may be increased not to exceed 5 percent of the 'total amount of the contract without a negotiated unit price having been agreed upon for the item involved.

6. Such alterations shall not be considered a waiver of any conditions of the contract or invalidate any of the provisions thereof. Should any alterations in the plans, as described above, result in an increase or decrease in the quantities of work to be performed, the Contractor shall accept payment in full at the contract unit prices for the actual quantities of work done except that, should any such alteration directly cause the loss of any work or material already furnished by the Contractor under the terms of the original contract, he shall be reimbursed for the actual cost of such work or of salvaging such materials. Any such materials may, at the option of the Owner be purchased at its actual cost to the Contractor.

7. Should any increase or decrease in any contract item be greater than provided above, the contract unit price shall be negotiated prior to performance of the work involving such item. The negotiation shall be based on the portion of any major item over or under 10 percent of the contract quantity of such item, and on that portion of any minor item exceeding 5 percent of the total amount of the contract. In the event the parties cannot agree upon a negotiated unit price, the Owner may require the Contractor to do such work on a “Force Account” basis.

MAPS & PHOTOGRAPHS

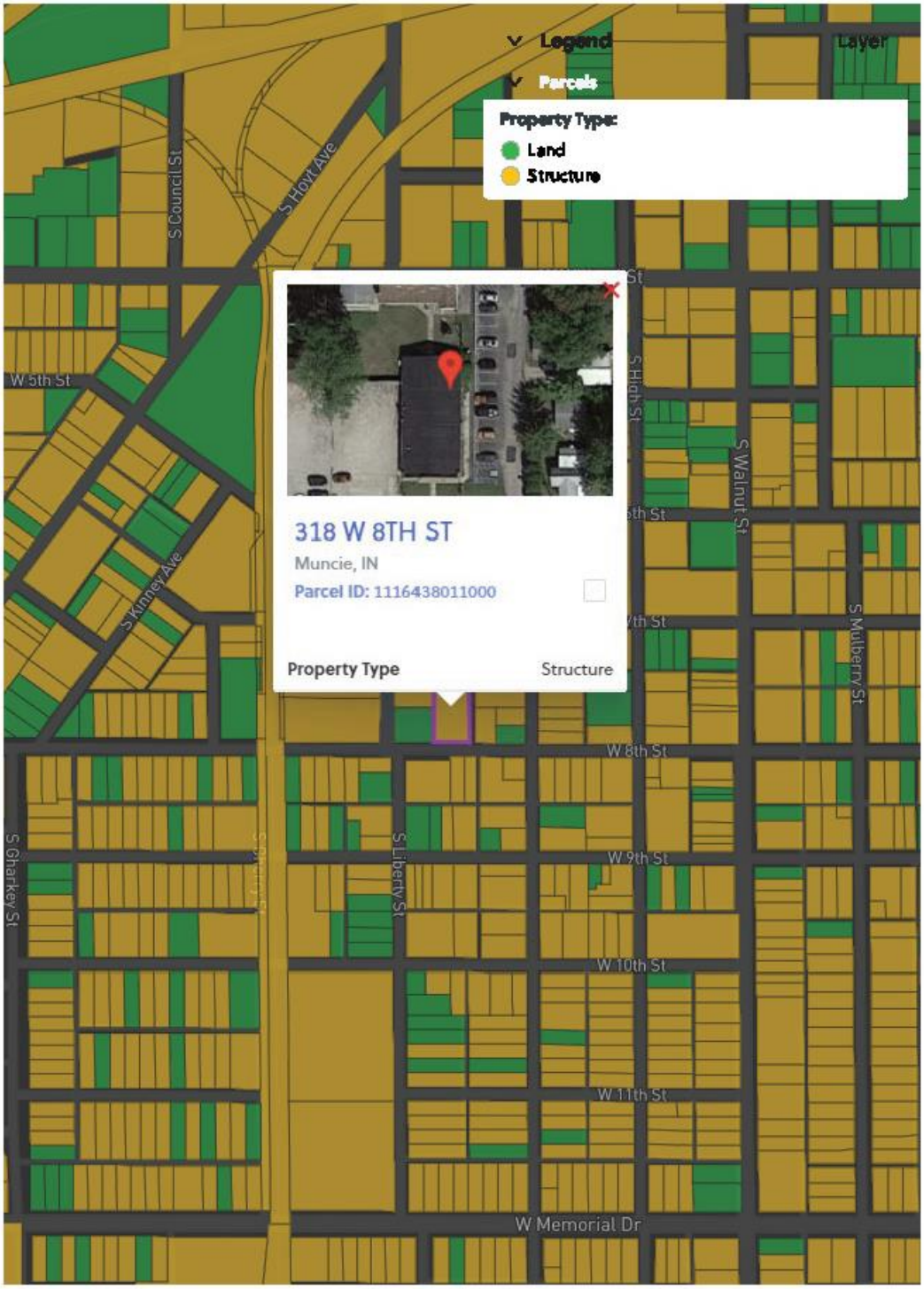

Exported from TOLEMI www.tolemi.com

APPENDIX

BID FORMS (LOOSE, NOT BOUND INTO PACKET)

ATTACHMENT A BID SUBMITTAL FORM
ATTACHEMENT B GENERAL DECISION NUMBER:
ATTACHMENT C SCOPE OF WORK & DRAWINGS
CONTRACTOR'S PROFILE FORM
REQUEST FOR SUB-CONTRACTOR(S)
SUBCONTRACTOR'S PROFILE FORM
NON-COLLUSION AFFIDAVIT
AFFIDAVIT CONCERNING EMPLOYMENT OF UNAUTHORIZED ALIENS
CERTIFICATE OF NON-SEGREGATED FACILITIES
CERTIFICATION REGARDING DEBARMENT, SUSPENSION, AND OTHER RESPONSIBILITY MATTERS
SECTION 3 BUSINESS CONCERN CONTRACTOR VERIFICATION
SECTION 3 WORKSHEET
GENERAL BID FORM 96
(REV. 2013; STATE BOARD OF ACCOUNTS)
FINANCIAL STATEMENT
5% BID SECURITY (FOR ANY OF $75,000.00 OR MORE)

ATTACHMENT A: BID SUBMITTAL FORM

COMMUNITY DEVELOPMENT BLOCK GRANT PROJECT

This BID Form shall be completed in its entirety and submitted in accordance with the instructions.

RESPONDER:

_____

ADDRESS: _____

_____

TELEPHONE: _____ FAX: _____

E-MAIL: _____

A. **BASE BID**

The Undersigned, having visited the site of proposed construction of this Project, read the Instructions to Bidders as well as the Specifications and Attachments provided in the Project Manual, hereby proposes to design and furnish all materials, labor, tools, equipment, services, and taxes required to complete this Project. Documents, drawings and/or related materials are attached to comply with the Bid Proposals by the Office of Community Development, City of Muncie for the sum of:

_____Dollars $_____.

B. **ALTERNATES**:

Alternate #1: ()

_____Dollars $_____.

Alternate #2 ()

_____ Dollars $_____.

C. **ADDENDA RECEIVED**:

Receipt of Addenda number(s) _____ through _____, inclusive, is hereby acknowledged.

D. **COMPLETION TIME**

If we are awarded the contract, we will begin construction within _____ calendar days of receipt of the executed Agreement.

We estimate the completion time for the project to be _____ calendar days, assuming that the award of the Contract allows the start of construction within 60 days of the bid opening and that we are not delayed by causes beyond our control.

ATTACHMENT A: BID SUBMITTAL FORM

I (we) hereby affirm and certify under penalties of perjury that the facts and information contained in the foregoing BID and the attached submittals are true and correct to the best of my (our) knowledge and belief.

IN TESTIMONY WHEREOF, the BIDr has hereunto set his hand this ____ day of _____2016.

FIRM NAME: _____

BY: _____

TITLE: _____

ACKNOWLEDGEMENT

STATE OF) _____

COUNTY OF) _____

_____ being duly sworn, deposes that he or she is

_____ of the above _____
(Title) (Company)

and that the statements contained in the foregoing BID and certification are true and correct.

Subscribed and sworn to me this _____ day of _____, 2016.

My Commission Expires: _____

County / State of Residence: _____

ATTACHMENT B: "General Decision Number: IN20200025 09/11/2020

Superseded General Decision Number: IN20190025

State: Indiana

Construction Type: Residential

County: Delaware County in Indiana.

Note: Under Executive Order (EO) 13658, an hourly minimum wage of $10.80 for calendar year 2020 applies to all contracts subject to the Davis-Bacon Act for which the contract is awarded (and any solicitation was issued) on or after January 1, 2015. If this contract is covered by the EO, the contractor must pay all workers in any classification listed on this wage determination at least $10.80 per hour (or the applicable wage rate listed on this wage determination, if it is higher) for all hours spent performing on the contract in calendar year 2020. If this contract is covered by the EO and a classification considered necessary for performance of work on the contract does not appear on this wage determination, the contractor must pay workers in that classification at least the wage rate determined through the conformance process set forth in 29 CFR 5.5(a)(1)(ii) (or the EO minimum wage rate,if it is higher than the conformed wage rate). The EO minimum wage rate will be adjusted annually. Please note that this EO applies to the above-mentioned types of contracts entered into by the federal government that are subject to the Davis-Bacon Act itself, but it does not apply to contracts subject only to the Davis-Bacon Related Acts, including those set forth at 29 CFR 5.1(a)(2)-(60). Additional information on contractor requirements and worker protections under the EO is available at www.dol.gov/whd/govcontracts.

Modification Number	Publication Date
0	01/03/2020
1	01/24/2020
2	06/26/2020
3	07/03/2020
4	09/11/2020

ENGI0103-025 04/01/2016

	Rates	Fringes
POWER EQUIPMENT OPERATOR:		
Backhoe/Excavator.....	$ 33.65	16.40

ATTACHMENT B: "General Decision Number: IN20200025 09/11/2020

ENGI0103-027 04/01/2016

	Rates	Fringes
POWER EQUIPMENT OPERATOR: (PAVER: Asphalt, Aggregate, and Concrete)	$ 33.65	16.40

ENGI0150-029 06/01/2014

	Rates	Fringes
POWER EQUIPMENT OPERATOR: (2) Loader	$ 38.60	28.83

LABO0041-007 06/01/2020

	Rates	Fringes
LABORER (2) Mason Tender - Cement/Concrete	$ 37.15	23.48

LABO0741-006 06/01/2020

	Rates	Fringes
LABORER (1) Pipelayer	$ 23.13	16.00

PLUM0136-012 07/01/2020

	Rates	Fringes
PLUMBER	$ 28.21	3.06

ROOF0026-004 06/01/2019

	Rates	Fringes
ROOFER	$ 37.64	20.33

---

* SHEE0020-002 07/01/2020

	Rates	Fringes
SHEET METAL WORKER (Excludes HVAC Duct Installation)	$ 33.67	27.11

ATTACHMENT B: "General Decision Number: IN20200025 09/11/2020

---
* UAVG-IN-0002 01/01/2019

	Rates	Fringes
TRUCK DRIVER (Dump)	$ 29.63	17.08

---
* UAVG-IN-0006 01/01/2019

	Rates	Fringes
POWER EQUIPMENT OPERATOR (Bobcat/Skid Steer/Skid Loader)	$ 32.00	30.65
POWER EQUIPMENT OPERATOR (Grader/Blade)	$ 35.71	29.55

SUIN2012-010 08/13/2012

	Rates	Fringes
CARPENTER	$ 18.36	7.46
CEMENT MASON/CONCRETE FINISHER	$ 17.78	0.00
ELECTRICIAN	$ 17.48	3.40
LABORER: Common or General	$ 10.44	0.00
LABORER: Mason Tender - Brick	$ 14.00	0.00
OPERATOR: Bulldozer	$ 27.35	13.44
PAINTER: Brush Only	$ 18.29	7.43
PAINTER: Roller	$ 18.29	7.43
PAINTER: Spray	$ 18.29	7.43
SHEET METAL WORKER (HVAC Duct Installation Only)	$ 26.20	10.74

WELDERS - Receive rate prescribed for craft performing operation to which welding is incidental.

==========

ATTACHMENT B: "General Decision Number: IN20200025 09/11/2020

Note: Executive Order (EO) 13706, Establishing Paid Sick Leave for Federal Contractors applies to all contracts subject to the Davis-Bacon Act for which the contract is awarded (and any solicitation was issued) on or after January 1, 2017. If this contract is covered by the EO, the contractor must provide employees with 1 hour of paid sick leave for every 30 hours they work, up to 56 hours of paid sick leave each year. Employees must be permitted to use paid sick leave for their own illness, injury or other health-related needs, including preventive care; to assist a family member (or person who is like family to the employee) who is ill, injured, or has other health-related needs, including preventive care; or for reasons resulting from, or to assist a family member (or person who is like family to the employee) who is a victim of, domestic violence, sexual assault, or stalking. Additional information on contractor requirements and worker protections under the EO is available at www.dol.gov/whd/govcontracts.

Unlisted classifications needed for work not included within the scope of the classifications listed may be added after award only as provided in the labor standards contract clauses (29CFR 5.5 (a) (1) (ii)).

The body of each wage determination lists the classification and wage rates that have been found to be prevailing for the cited type(s) of construction in the area covered by the wage determination. The classifications are listed in alphabetical order of ""identifiers"" that indicate whether the particular rate is a union rate (current union negotiated rate for local), a survey rate (weighted average rate) or a union average rate (weighted union average rate).

Union Rate Identifiers

A four letter classification abbreviation identifier enclosed in dotted lines beginning with characters other than ""SU"" or ""UAVG"" denotes that the union classification and rate were prevailing for that classification in the survey. Example: PLUM0198-005 07/01/2014. PLUM is an abbreviation identifier of the union which prevailed in the survey for this classification, which in this example would be Plumbers. 0198 indicates the local union number or district council number where applicable, i.e., Plumbers Local 0198. The next number, 005 in the example, is an internal number used in processing

the wage determination. 07/01/2014 is the effective date of the most current negotiated rate, which in this example is July 1, 2014.

Union prevailing wage rates are updated to reflect all rate changes in the collective bargaining agreement (CBA) governing this classification and rate.

Survey Rate Identifiers

Classifications listed under the ""SU"" identifier indicate that no one rate prevailed for this classification in the survey and the published rate is derived by computing a weighted average rate based on all the rates reported in the survey for that classification. As this weighted average rate includes all rates reported in the survey, it may include both union and non-union rates. Example: SULA2012-007 5/13/2014. SU indicates the rates are survey rates based on a weighted average calculation of rates and are not majority rates. LA indicates the State of Louisiana. 2012 is the year of survey on which these classifications and rates are based. The next number, 007 in the example, is an internal number used in producing the wage determination. 5/13/2014 indicates the survey completion date for the classifications and rates under that identifier.

Survey wage rates are not updated and remain in effect until a new survey is conducted.

Union Average Rate Identifiers

Classification(s) listed under the UAVG identifier indicate that no single majority rate prevailed for those classifications; however, 100% of the data reported for the classifications was union data. EXAMPLE: UAVG-OH-0010 08/29/2014. UAVG indicates that the rate is a weighted union average rate. OH indicates the state. The next number, 0010 in the example, is an internal number used in producing the wage determination. 08/29/2014 indicates the survey completion date for the classifications and rates under that identifier.

A UAVG rate will be updated once a year, usually in January of each year, to reflect a weighted average of the current negotiated/CBA rate of the union locals from which the rate is based.

ATTACHMENT B: "General Decision Number: IN20200025 09/11/2020

WAGE DETERMINATION APPEALS PROCESS

1.) Has there been an initial decision in the matter? This can be:

* an existing published wage determination
* a survey underlying a wage determination
* a Wage and Hour Division letter setting forth a position on a wage determination matter
* a conformance (additional classification and rate) ruling

On survey related matters, initial contact, including requests for summaries of surveys, should be with the Wage and Hour Regional Office for the area in which the survey was conducted because those Regional Offices have responsibility for the Davis-Bacon survey program. If the response from this initial contact is not satisfactory, then the process described in 2.) and 3.) should be followed.

With regard to any other matter not yet ripe for the formal process described here, initial contact should be with the Branch of Construction Wage Determinations. Write to:

Branch of Construction Wage Determinations
Wage and Hour Division
U.S. Department of Labor
200 Constitution Avenue, N.W.
Washington, DC 20210

2.) If the answer to the question in 1.) is yes, then an interested party (those affected by the action) can request review and reconsideration from the Wage and Hour Administrator (See 29 CFR Part 1.8 and 29 CFR Part 7). Write to:

Wage and Hour Administrator
U.S. Department of Labor
200 Constitution Avenue, N.W.
Washington, DC 20210

The request should be accompanied by a full statement of the interested party's position and by any information (wage payment data, project description, area practice material, etc.) that the requestor considers relevant to the issue.

3.) If the decision of the Administrator is not favorable, an interested party may appeal directly to the Administrative Review Board (formerly the Wage Appeals Board). Write to:

ATTACHMENT B: "General Decision Number: IN20200025 09/11/2020

Administrative Review Board
U.S. Department of Labor
200 Constitution Avenue, N.W.
Washington, DC 20210

4.) All decisions by the Administrative Review Board are final.

==========

END OF GENERAL DECISION"

ATTACHMENT C: SCOPE OF WORK & DRAWINGS

BRIDGES - TINY HOMES PHASE 1 FENCE PROJECT

318 W 8TH ST, MUNCIE, IN 47302

OWNER

CITY OF MUNCIE
300 N High Street
Muncie, IN 47305
PH: (765) 747-4825
EMAIL: bking@cityofmuncie.com

CONTACT:
BRAD KING

ARCHITECT

JONES PETRIE RAFINSKI
325 S. Lafayette Blvd.
South Bend, IN 46601
PH: (574) 232-4388
EMAIL: EKOWALCZYK@JPR1SOURCE.COM

CONTACT:
ED KOWALCZYK, AIA

SHEET INDEX

GENERAL

G101 TITLE SHEET/ DRAWING INDEX

ARCHITECTURAL

A101 EXISTING FENCE LAYOUT
A102 PROPOSED FENCE LAYOUT AND DETAILS
A103 SPECIFICATIONS

LOCAL CODE INFORMATION

BUILDING CODE:	2014 INDIANA BUILDING CODE (2012 IBC)
MECHANICAL CODE:	2014 INDIANA MECHANICAL CODE (2012 IBC)
PLUMBING CODE:	2012 INDIANA PLUMBING CODE (2012 IPC)
ELECTRICAL CODE:	2009 INDIANA ELECTRIC CODE (NFPA-70-2008)
FIRE CODE:	2014 INDIANA FIRE CODE (2012 IFC)
ENERGY CODE:	2010 IECC (ASHRAE 90.1-2007)
BARRIER FREE CODE:	2012 INDIANA BUILDING CODE (2009 ADAAG) (ANSI-A117.1 2003)

GENERAL NOTES

1. THESE DRAWINGS ARE GENERAL DESCRIPTIONS OF THE MATERIALS AND PRODUCTS TO BE USED TO COMPLETE THIS FENCE PROJECT . IT IS THE CONTRACTOR'S RESPONSIBILITY TO VISIT THE SITE, COMPARE EXISTING CONDITIONS WITH PROPOSED PLANS AND SPECS AND PROVIDE SITE PREPARATION AND ANY OTHER COMPONENT REQUIRED TO COMPLETE THE PROPOSED CONSTRUCTION. CONTACT ARCHITECT IMMEDIATELY WHERE INCONSISTENCIES ARE DISCOVERED.
2. EXISTING MATERIALS AND CONDITIONS INDICATED ON THESE DRAWINGS ARE BASED ON LIMITED FIELD OBSERVATIONS AND ARE NOT WARRANTED TO INDICATE ACTUAL MATERIALS AND CONDITIONS. CONTRACTOR SHALL BE RESPONSIBLE TO VERIFY ALL EXISTING MATERIALS AND CONDITIONS. CONTRACTOR SHALL NOTIFY ARCHITECT UPON DISCOVERY OF ANY MATERIALS AND CONDITIONS THAT HAVE A SIGNIFICANT VARIATION FROM THE DRAWINGS OR WHICH AFFECT THE DESIGN OF THE PROPOSED CONSTRUCTION.
3. CONTRACTOR TO PROVIDE PRODUCT SUBMITTALS OF ALL MATERIALS TO ARCHITECT FOR REVIEW WITH OWNER. ALL MATERIALS TO BE INSTALLED PER MANUFACTURERS SPECIFICATIONS. PRODUCT SAMPLES TO BE PROVIDED TO ARCHITECT FOR REVIEW AS REQUESTED.

A-TERMS AND ABBREVIATIONS

ABV	ABOVE
ADH	ADHESIVE
ADJ	ADJACENT
ADJT	ADJUSTABLE
AGG	AGGREGATE
ALT	ALTERNATE
AL	ALUMINUM
ANC	ANCHOR, ANCHORAGE
AB	ANCHORBOLT
ANOD	ANODIZED
ARCH	ARCHITECT, ARCHITECTURAL
AD	AREA DRAIN
ASPH	ASPHALT
AUTO	AUTOMATIC

B-TERMS AND ABBREVIATIONS

BKR	BACKER
BL	BASE LINE
BM	BEAM
BRG	BEARING
BPL	BEARING PLATE
BEL	BELOW
BM	BENCH MARK
BET	BETWEEN
BVL	BEVELED
BEY	BEYOND
BLK	BLOCK
BLKG	BLOCKING
BD	BOARD
BS	BOTH SIDES
BOT	BOTTOM
BRKT	BRACKET
BRS	BRASS
BRK	BRICK
BRZ	BRONZE
BLDG	BUILDING
BO	BY OWNER

C-TERMS AND ABBREVIATIONS

CI	CAST IRON
CST	CAST STONE
CB	CATCH BASIN
CEM	CEMENT
CHAM	CHAMFER
CR	CHROMIUM
CIR	CIRCLE
CIRC	CIRCUMFERENCE
CLR	CLEAR, CLEARANCE
CLS	CLOSURE
COL	COLUMN
COMB	COMBINATION
COM	COMMON
COMPT	COMPARTMENT
COMPO	COMPOSITION, COMPOSITE
COMP	COMPRESS,(ED), (ION), (IBLE)
CONC	CONCRETE
CMU	CONCRETE MASONRY UNIT
CONN	CONNECTION
CONST	CONSTRUCTION
CONT	CONTINUE, CONTINUOUS
CONTR	CONTRACT, CONTRACTOR
CJT	CONTROL JOINT
CPR	COPPER
CORR	CORRUGATED
CTR	COUNTER
CS	COUNTERSINK
CRS	COURSE
CFT	CUBIC FOOT
CYD	CUBIC YARD

D-TERMS AND ABBREVIATIONS

DP	DAMPROOFING
DL	DEADLOAD
DEM	DEMOLISH, DEMOLITION
DMT	DEMOUNTABLE
DTL	DETAIL
DIAG	DIAGONAL
DIA	DIAMETER
DIM	DIMENSION
DIR	DIRECTION
DISP	DISPENSER
DIV	DIVISION
DR	DOOR
DN	DOWN
DS	DOWNSPOUT
DT	DRAIN TILE
DWG	DRAWING

E-TERMS AND ABBREVIATIONS

EA	EACH
EF	EACH FACE
EW	EACH WAY
ESMNT	EASEMENT
E	EAST
ELEC	ELECTRIC, (AL)
EL	ELEVATION (VERTICAL HEIGHT)
ELE	ELEVATION VIEW
ENC	ENCLOSE, (URE)
EPX	EPOXY
EQ	EQUAL
EQP	EQUIPMENT
EST	ESTIMATE
EXG	EXISTING
EXMP	EXPANDED METAL PLATE
EB	EXPANSION BOLT
EJT	EXPANSION JOINT
EXP	EXPOSED
EXT	EXTERIOR

F-TERMS AND ABBREVIATIONS

FOC	FACE OF CONCRETE
FOF	FACE OF FINISH
FOM	FACE OF MASONRY
FAS	FASTEN, FASTENER
FN	FENCE
FBD	FIBERBOARD
FIN	FINISH, (ED)
FFE	FINISHED FLOOR ELEVATION
FFL	FINISHED FLOOR LINE
FIXT	FIXTURE
FLX	FLEXIBLE
FD	FLOOR DRAIN
FL	FLOW LINE
FJT	FLUSH JOINT
FTG	FOOTING
FND	FOUNDATION
FR	FRAME, (D), (ING)
FS	FULL SIZE
FUT	FUTURE

G-TERMS AND ABBREVIATIONS

GA	GAGE, GAUGE
GV	GALVANIZED
GKT	GASKET, (ED)
GC	GENERAL CONTRACT
GD	GRADE, GRADING
GRT	GRATE, (ING)
GVL	GRAVEL
GT	GROUT
GRD	GUARD
GUT	GUTTER

H-TERMS AND ABBREVIATIONS

HC	HANDICAP
HDW	HARDWARE
HDR	HEADER
HD	HEAVY DUTY
HT	HEIGHT
HPT	HIGH POINT
HOR	HORIZONTAL
HB	HOSE BIBB

I-TERMS AND ABBREVIATIONS

INCL	INCLUDE, (ED), (ING)
ID	INSIDE DIAMETER
INTM	INTERMEDIATE
INV	INVERT

J-TERMS AND ABBREVIATIONS

JT	JOINT
JF	JOINT FILLER

K-TERMS AND ABBREVIATONS

KPL	KICKPLATE
KO	KNOCKOUT

L-TERMS AND ABBREVIATIONS

LBL	LABEL
LAD	LADDER
LB	LAG BOLT
LO	LAYOUT
LH	LEFT HAND
L	LENGTH
LW	LIGHTWEIGHT
LMS	LIMESTONE
LTL	LINTEL
LL	LIVE LOAD
LOC	LOCATE
LLD	LOOSE LAID
LPT	LOW POINT

M-TERMS AND ABBREVIATIONS

MB	MACHINE BOLT
MFR	MANUFACTURE, (ER) (ED)
MAS	MASONRY
MTL	MATERIAL
MAX	MAXIMUM
MECH	MECHANIC, (AL)
MED	MEDIUM
MBR	MEMBER
MMB	MEMBRANE
MET	METAL
M	METER, (S)
MIN	MINIMUM
MISC	MISCELLANEOUS
MOD	MODULAR
MT	MOUNT, (ED), (ING)
MOV	MOVABLE

N-TERMS AND ABBREVIATIONS

NL	NAILABLE
NAT	NATURAL
NI	NICKEL
NOM	NOMINAL
N	NORTH
NIC	NOT IN CONTRACT
NTS	NOT TO SCALE
NO	NUMBER

O-TERMS AND ABBREVIATIONS

OC	ON CENTER, (S)
OP	OPAQUE
OPG	OPENING
OPH	OPPOSITE HAND
ORN	ORNAMENTAL
OD	OUTSIDE DIAMETER
OA	OVERALL
OH	OVERHEAD

P-TERMS AND ABBREVIATIONS

PNT	PAINT, (ED)
PAR	PARALLEL
PK	PARKING
PTN	PARTITION
PV	PAVE, (D), (ING)
PVMT	PAVEMENT
PERF	PERFORATE, (ED)
PER	PERIMETER
PLA	PLASTIC
PL	PLATE
PT	POINT
PVC	POLYVINYL CHLORIDE
PCPL	PORTLAND CEMENT PLASTER
PD	POUND,(S)
PCF	POUNDS PER CUBIC FOOT
PLF	POUNDS PER LINEAR FOOT
PSF	POUNDS PER SQUARE FOOT
PSI	POUNDS PER SQUARE INCH
PCC	PRECAST CONCRETE
PFB	PREFABRICATE, (ED)
PFN	PREFINISHED
PRF	PREFORMED
PREM	PREMOULDED
PRTD	PRESSURE TREATED
PROJ	PROJECT, (ED), (ING)
PL	PROPERTY LINE

R-TERMS AND ABBREVIATIONS

RBT	RABBET, REBATE
RAD	RADIUS
REC	RECESS. (ED)
REF	REFER, (ENCE)
RFL	REFLECT, (ED), (IVE), (OR)
REIN	REINFORCE, (ED), (ING), (MENT)
RECP	REINFORCED CONCRETE PIPE
REM	REMOVE, (ABLE)
REQ'D	REQUIRED
RES	RESILIENT
RVS	REVERSE (SIDE)
REV	REVISE, (S), (ED)
RH	RIGHT HAND
ROW	RIGHT OF WAY
RVT	RIVET
RO	ROUGH OPENING
RCP	ROUND CONCRETE PIPE

S-TERMS AND ABBREVIATIONS

SCH	SCHEDULE
SCN	SCREEN, (ED)
SCONC	SEALED CONCRETE
SNT	SEALANT
SEC	SECTION
SVYD	SERVICE YARD
SHT	SHEET
SIM	SIMILAR
SL	SLEEVE
SLO	SLOPE
SC	SOLID CORE
S	SOUTH
SPC	SPACE, (R)
SPL	SPECIAL
SPEC	SPECIFICATION
SQ	SQUARE
SQ FT	SQUARE FOOT (FEET)
SST	STAINLESS STEEL
STD	STANDARD
STA	STATION
ST	STEEL
STO	STORAGE
STR	STRUCTURAL
SUS	SUSPENDED
SYD	SIDE YARD
SYM	SYMMETRY, (ETRICAL)
SYN	SYNTHETIC
SYS	SYSTEM

T-TERMS AND ABBREVIATIONS

THK	THICK, (NESS)
THR	THRESHOLD
TBRL	TO BE RELOCATED
TOBR	TO BE REMOVED
TOL	TOLERANCE
TSL	TOP OF CONCRETE SLAB
TC	TOP OF CURB
TJ	TOP OF JOIST
TP	TOP OF PLATE
TST	TOP OF STEEL
TSF	TOP OF SUBFLOOR
TW	TOP OF WALL
TPG	TOPPING
TOR	TO REMAIN
TRNB	TURNBUCKLE
TYP	TYPICAL

U-TERMS AND ABBREVIATIONS

UC	UNDERCUT
UNF	UNFINISHED
UNO	UNLESS NOTED OTHERWISE
UTL	UTILITY

V-TERMS AND ABBREVIATIONS

VJ	V-JOINT
VB	VAPOR BARRIER
VNR	VENEER
VERT	VERTICAL

W-TERMS AND ABBREVIATIONS

WP	WATERPROOFING
WR	WATER RESISTANT
WWF	WELDED WIRE FABRIC
W	WEST
WID	WIDTH, WIDE
WM	WIRE MESH
WO	WITHOUT
WD	WOOD
WI	WROUGHT IRON

DRAWING SYMBOLS LEGEND

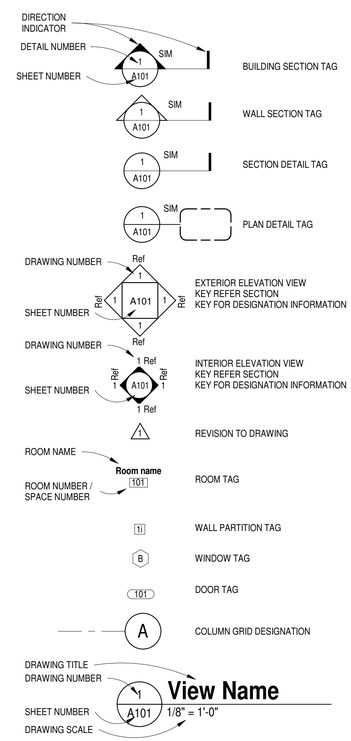

LOCATION MAP

SITE MAP

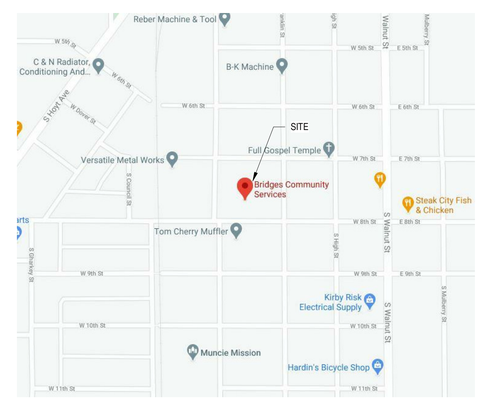

AREA MAP

REV	DESCRIPTION	BY	DATE

The concepts, designs, plans, details and other information as shown on this document are the sole property of JPR and were created, developed, and presented for use on this specific project and are not to be used on any other project or for any purpose not specifically agreed to in writing by JPR and shall not be used or disseminated without the expressed written permission of JPR. © 2020 JPR - All Rights Reserved.

EDWARD J. KOWALCZYK REGISTERED No. AR11700117 STATE OF INDIANA ARCHITECT

JONES PETRIE RAFINSKI
South Bend, IN p: 574.232.4388
Fort Wayne, IN p: 260.422.2522
Elkhart, IN p: 574.293.7762

BRIDGES - TINY HOMES PHASE 1 FENCE PROJECT

CITY OF MUNCIE

TITLE SHEET/ DRAWING INDEX

DESIGNED BY:	EJK
REVIEWED BY:	EJK
DRAWN BY:	AKT, CSS
DATE:	9/11/2020
JOB NUMBER:	2020-0209:103
SCALE:	1/4" = 1'-0"

G101

9/11/2020 4:45:26 PM

ATTACHMENT C: SCOPE OF WORK & DRAWINGS

NOTE: FENCE POSTS TYP SPACED 8' UNLESS OTHERWISE NOTED

EXISTING BUILDING
GATE
FENCE
FENCE POST

DEMOLITION NOTES:

REMOVE ALL FENCE POSTS, GATES, PICKETS, CONCRETE IN GROUND, AND PREP AREA FOR NEW FENCE. FILL HOLES WITH TOP SOIL AND RESEED.

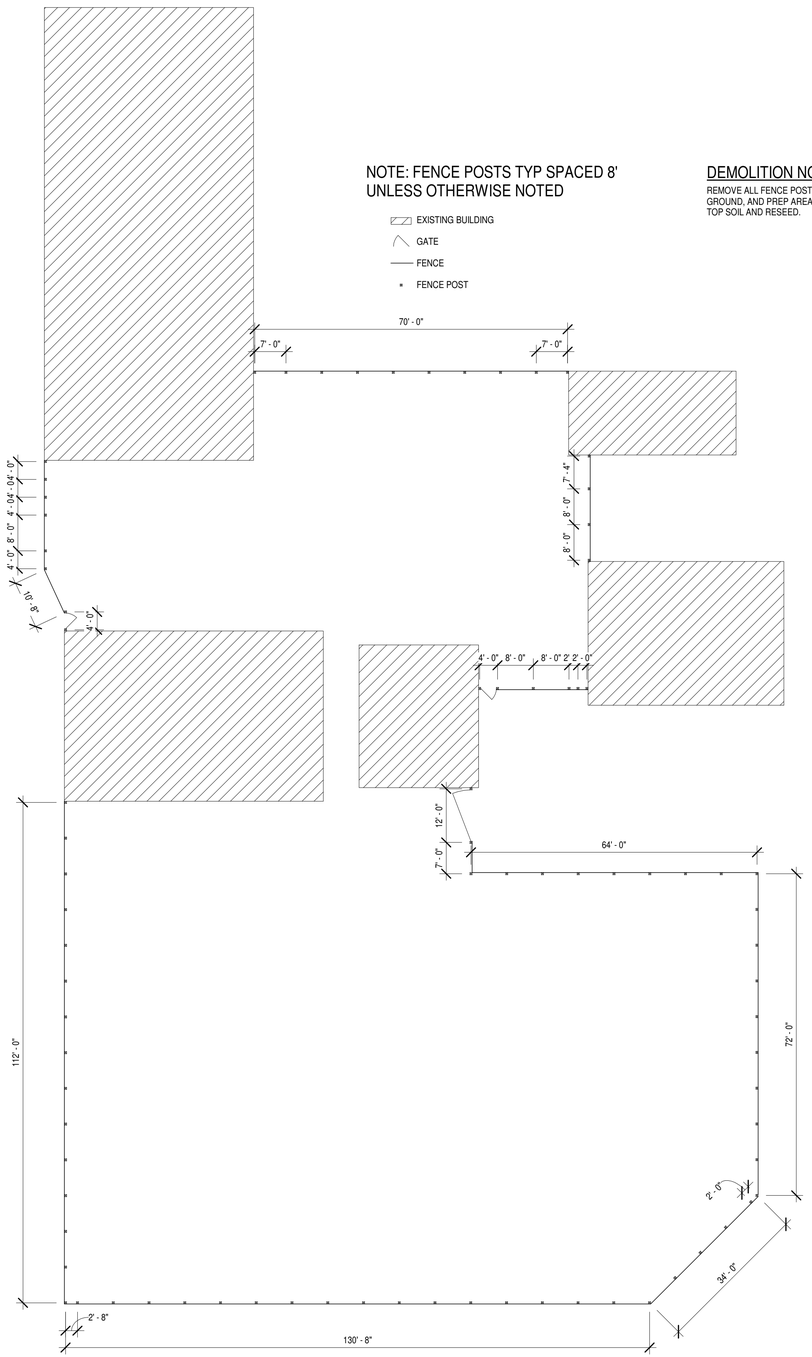

1 A101 **FENCE REMOVAL PLAN**
1/16" = 1'-0"

N

REV	DESCRIPTION	BY	DATE

The concepts, designs, plans, details and other information as shown on this document are the sole property of JPR and were created, developed, and presented for use on this specific project and are not to be used for any other purpose or project without the written permission of JPR. © 2020 JPR - All Rights Reserved.

EDWARD J. KOWALCZYK REGISTERED No. AR11700117 STATE OF INDIANA ARCHITECT

JONES PETRIE RAFINSKI
Elkhart, IN p: 574.293.7762
South Bend, IN p: 574.232.4388
Fort Wayne, IN p: 260.422.2522

BRIDGES - TINY HOMES PHASE 1 FENCE PROJECT

CITY OF MUNCIE

EXISTING FENCE LAYOUT

DESIGNED BY: EJK
REVIEWED BY: EJK
DRAWN BY: AKT
DATE: 9/11/2020
JOB NUMBER: 2020-0209:103
SCALE: 1/16" = 1'-0"

A101

9/11/2020 4:45:22 PM

ATTACHMENT C: SCOPE OF WORK & DRAWINGS

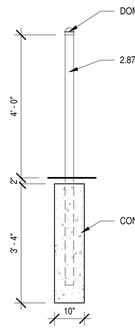

2 A102 **TYP CORNER/ GATE POST**
1/2" = 1'-0"

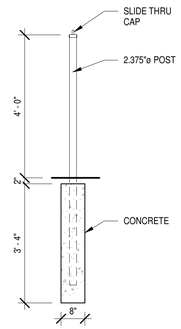

3 A102 **TYP LINE POST**
1/2" = 1'-0"

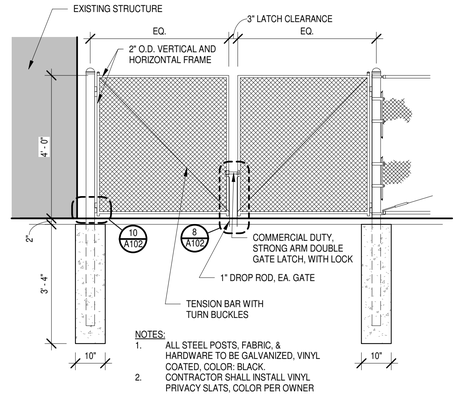

NOTES:
1. ALL STEEL POSTS, FABRIC, & HARDWARE TO BE GALVANIZED, VINYL COATED, COLOR: BLACK.
2. CONTRACTOR SHALL INSTALL VINYL PRIVACY SLATS, COLOR PER OWNER

4 A102 **DOUBLE GATE ELEVATION**
1/2" = 1'-0"

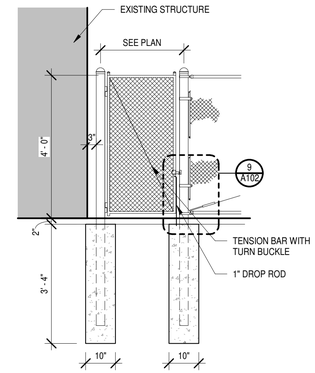

5 A102 **SINGLE GATE ELEVATION**
1/2" = 1'-0"

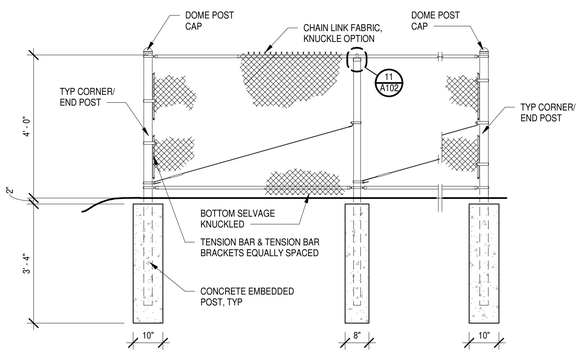

6 A102 **TYP CORNER ELEVATION**
1/2" = 1'-0"

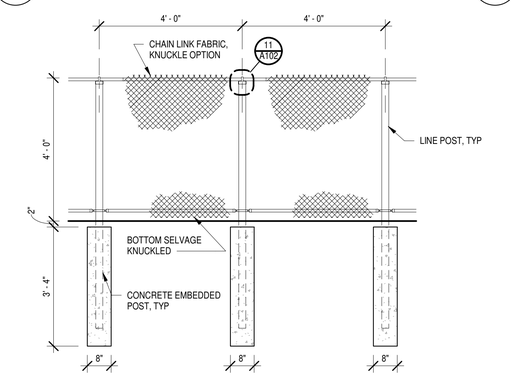

7 A102 **TYP FENCE ELEVATION**
1/2" = 1'-0"

GENERAL NOTES:
ALL FENCING PRIVACY SLATS AS NOTED IN SPECIFICATIONS

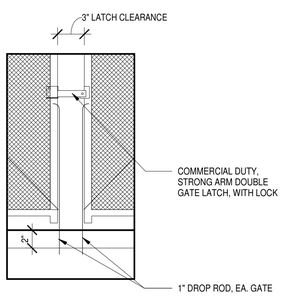

8 A102 **TYP LOCK/ LATCH DETAIL @ DOUBLE GATE**
1 1/2" = 1'-0"

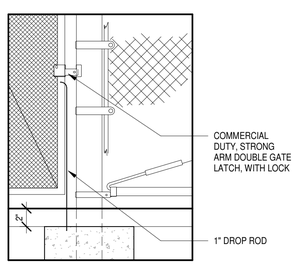

9 A102 **TYP LOCK/ LATCH DETAIL @ SINGLE GATE**
1 1/2" = 1'-0"

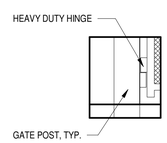

10 A102 **TYP HINGE DETAIL**
1 1/2" = 1'-0"

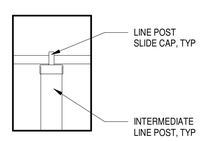

11 A102 **TYP INTERMEDIATE LINE POST TOP**
1 1/2" = 1'-0"

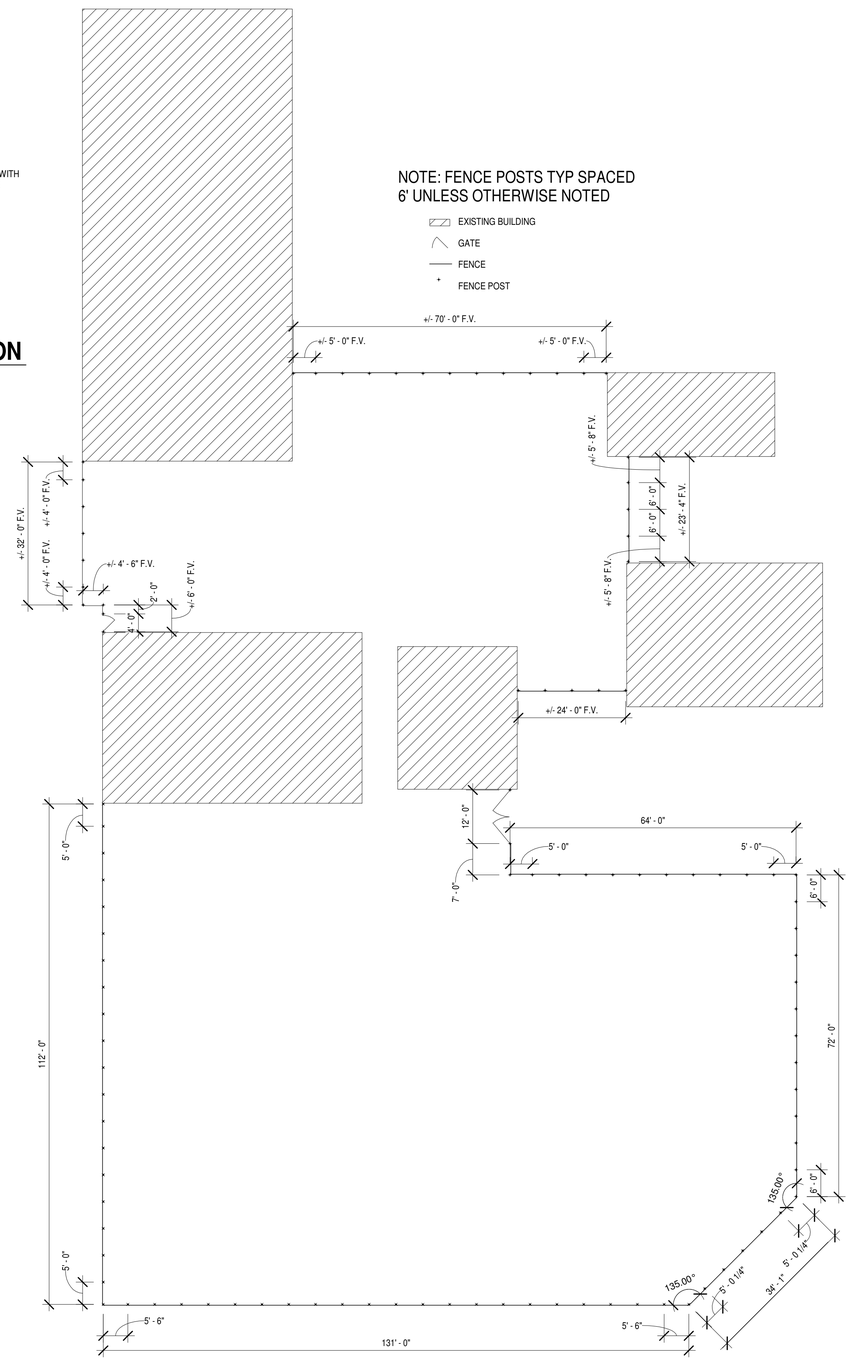

1 A102 **PROPOSED FENCE LAYOUT PLAN**
1/16" = 1'-0"

REV	DESCRIPTION	BY	DATE

The concepts, designs, plans, details and other information as shown on this document are the sole property of JPR and were created, developed, and presented for use on this specific project and are not to be used on any other project or for any purpose other than that for which they were built. Any reuse without written consent shall be deemed to be a violation of the rights of JPR. © 2020 JPR. All Rights Reserved.

EDWARD J. KOWALCZYK REGISTERED No. AR11700117 STATE OF INDIANA ARCHITECT

JONES PETRIE RAFINSKI
Fort Wayne, IN p: 260.422.2522
South Bend, IN p: 574.233.4388
Elkhart, IN p: 574.293.7762

BRIDGES - TINY HOMES PHASE 1 FENCE PROJECT

CITY OF MUNCIE

PROPOSED FENCE LAYOUT AND DETAILS

DESIGNED BY: EJK
REVIEWED BY: EJK
DRAWN BY: AKT, CSS
DATE: 9/11/2020
JOB NUMBER: 2020-0209:103
SCALE: As indicated

A102

9/11/2020 4:45:23 PM

ATTACHMENT C: SCOPE OF WORK & DRAWINGS

SECTION 323113 - CHAIN LINK FENCES AND GATES

PART 1 - GENERAL

1.1 SUMMARY

A. Section Includes:

1. Chain-link fences.
2. Swing gates.
3. Privacy slats.

1.2 PREINSTALLATION MEETINGS

A. Preinstallation Conference: Conduct conference at [Project site] <Insert location.

1.3 ACTION SUBMITTALS

A. Product Data: For each type of product.

B. Shop Drawings: For each type of fence and gate assembly.

1. Include plans, elevations, sections, details, and attachments to other work.

C. Samples: For each exposed product and for each color and texture specified.

1.4 INFORMATIONAL SUBMITTALS

A. Sample warranty.

1.5 WARRANTY

A. Special Warranty: Installer agrees to repair or replace components of chain-link fences and gates that fail in materials or workmanship within specified warranty period.

1. Warranty Period: Five years from date of Substantial Completion.

PART 2 - PRODUCTS

2.1 PERFORMANCE REQUIREMENTS

A. Delegated Design: Engage a qualified professional engineer, as defined in Section 014000 "Quality Requirements," to design chain-link fence and gate frameworks.

B. Structural Performance: Chain-link fence and gate frameworks shall withstand the design wind loads and stresses for fence height(s) and under exposure conditions indicated according to ASCE/SEI 7:

1. Design Wind Load: Insert loads.

a. Minimum Post Size: Determine according to ASTM F 1043 for post spacing not to exceed 6' for Material Group IC, electric-resistance-welded round steel pipe.
b. Minimum Post Size and Maximum Spacing: Determine according to CLFMI WLG 2445, based on mesh size and pattern specified.

2.2 CHAIN-LINK FENCE FABRIC

A. General: Provide fabric in one-piece heights measured between top and bottom of outer edge of selvage knuckle or twist according to "CLFMI Product Manual" and requirements indicated below:

1. Fabric Height: As indicated on Drawings.
2. Steel Wire for Fabric: Wire diameter of .

a. Mesh Size: 1-3/4 inches.
b. Polymer-Coated Fabric: ASTM F 668, over -coated steel wire.

1) Color: Black, according to ASTM F 934.

c. Coat selvage ends of metallic-coated fabric before the weaving process with manufacturer's standard clear protective coating.

2.3 FENCE FRAMEWORK

A. Posts and Rails : ASTM F 1043 for framework, including rails, braces, and line; terminal; and corner posts. Provide members with minimum dimensions and wall thickness according to ASTM F 1043 or ASTM F 1083 based on the following:

1. Fence Height: As indicated on Drawings.
2. Light-Industrial-Strength Material: Group IC-L, round steel pipe, electric-resistance-welded pipe.

a. Line Post: 2.375 inches in diameter.
b. End, Corner, and Pull Posts: 2.875 inches.

3. Horizontal Framework Members: top bottom rails according to ASTM F 1043.
4. Metallic Coating for Steel Framework:

a. Type A zinc coating.

5. Polymer coating over metallic coating.

a. Color: Black, according to ASTM F 934.

2.4 TENSION WIRE

A. Polymer-Coated Steel Wire: diameter, tension wire according to ASTM F 1664, over zinc-coated steel wire.

1. Color: Black, according to ASTM F 934.

2.5 SWING GATES

A. General: ASTM F 900 for gate posts and double swing gate types.

1. Gate Leaf Width: As indicated.
2. Framework Member Sizes and Strength: Based on gate fabric height of 72 inches or less.

B. Pipe and Tubing:

1. Zinc-Coated Steel: ASTM F 1043 and ASTM F 1083; protective coating and finish to match fence framework.
2. Gate Posts: Round tubular steel.
3. Gate Frames and Bracing: Round tubular steel.

C. Frame Corner Construction: assembled with corner fittings.

D. Hardware:

1. Hinges: 180-degree inward 180-degree outward swing.
2. Latch: Permitting operation from both sides of gate with provision for padlocking accessible from both sides of gate.

2.6 FITTINGS

A. Provide fittings according to ASTM F 626.

B. Finish:

1. Metallic Coating for Pressed Steel or Cast Iron: Not less than 1.2 oz./sq. ft. of zinc.

a. Polymer coating over metallic coating.

2.7 PRIVACY SLATS

A. Fiber-Glass-Reinforced Plastic Slats: UV-light-stabilized fiber-glass-reinforced plastic, not less than 0.06 inch thick, sized to fit mesh specified for direction indicated, with vandal-resistant fasteners and lock strips.

B. Color: As selected by Architect from manufacturer's full range.

2.8 GROUT AND ANCHORING CEMENT

A. Anchoring Cement: Factory-packaged, nonshrink, nonstaining, hydraulic-controlled expansion cement formulation for mixing with water at Project site to create pourable anchoring, patching, and grouting compound. Provide formulation that is resistant to erosion from water exposure without needing protection by a sealer or waterproof coating, and that is recommended in writing by manufacturer for exterior applications.

PART 3 - EXECUTION

3.1 EXAMINATION

A. Do not begin installation before final grading is completed unless otherwise permitted by Architect.

3.2 PREPARATION

A. Stake locations of fence lines, gates, and terminal posts. Do not exceed intervals of 500 feet or line of sight between stakes. Indicate locations of utilities, lawn sprinkler system, underground structures, benchmarks, and property monuments.

3.3 CHAIN-LINK FENCE INSTALLATION

A. Install chain-link fencing according to ASTM F 567 and more stringent requirements specified.

B. Post Excavation: Drill or hand-excavate holes for posts to diameters and spacings indicated, in firm, undisturbed soil.

C. Post Setting: Set posts in concrete at indicated spacing into firm, undisturbed soil.

1. Verify that posts are set plumb, aligned, and at correct height and spacing, and hold in position during setting with concrete or mechanical devices.
2. Concrete Fill: Place concrete around posts to dimensions indicated and vibrate or tamp for consolidation. Protect aboveground portion of posts from concrete splatter.

a. Concealed Concrete: Place top of concrete 2 inches below grade to allow covering with surface material.

D. Terminal Posts: Install terminal end, corner, and gate posts according to ASTM F 567 and terminal pull posts at changes in horizontal or vertical alignment of as indicated on Drawings. For runs exceeding 500 feet, space pull posts an equal distance between corner or end posts.

E. Line Posts: Space line posts uniformly at 72 inches o.c.

F. Tension Wire: Install according to ASTM F 567, maintaining plumb position and alignment of fence posts. Pull wire taut, without sags. Fasten fabric to tension wire with 0.120-inch- diameter hog rings of same material and finish as fabric wire, spaced a maximum of 24 inches o.c. Install tension wire in locations indicated before stretching fabric. Provide horizontal tension wire at the following locations:

1. Extended along top and bottom of fence fabric.

G. Chain-Link Fabric: Apply fabric to outside of enclosing framework. Leave 1-inch bottom clearance between finish grade or surface and bottom selvage unless otherwise indicated. Pull fabric taut and tie to posts, rails, and tension wires. Anchor to framework so fabric remains under tension after pulling force is released.

H. Privacy Slats: Install slats in direction indicated, securely locked in place.

1. Vertically , for privacy factor of 70 to 75.

3.4 ADJUSTING

A. Gates: Adjust gates to operate smoothly, easily, and quietly, free of binding, warp, excessive deflection, distortion, nonalignment, misplacement, disruption, or malfunction, throughout entire operational range. Confirm that latches and locks engage accurately and securely without forcing or binding.

B. Lubricate hardware and other moving parts.

END OF SECTION 323113

REV	DESCRIPTION	BY	DATE

The concepts, designs, plans, details and other information as shown on this document are the sole property of JPR and were created, developed, and presented for use on this specific project and are not to be used for any other purpose or project. Any reproduction in part or whole is prohibited without the expressed written permission of JPR. © 2020 JPR - All Rights Reserved.

EDWARD J. KOWALCZYK REGISTERED No. AR11700117 STATE OF INDIANA ARCHITECT

JONES PETRIE RAFINSKI
South Bend, IN p: 574.232.4388
Fort Wayne, IN p: 260.422.2522
Elkhart, IN p: 574.293.7762

BRIDGES - TINY HOMES PHASE 1 FENCE PROJECT

CITY OF MUNCIE

SPECIFICATIONS

DESIGNED BY: EJK
REVIEWED BY: EJK
DRAWN BY: AKT
DATE: 9/11/2020
JOB NUMBER: 2020-0209:103
SCALE:

A103

9/11/2020 4:45:39 PM

CONTRACTOR PROFILE FORM

(If additional space is needed, please attach a separate sheet.)

Project Name: _____ Project No. _____

Contractor/Business Name: _____

Business Address: _____

Telephone: (____) _____-_____ Fax: (____) _____-_____

Federal Tax ID #: _____ State Tax ID #:_____

Our contract is with _____in the amount of $_____

for _____.
(identify specific work to be performed)

Will any work be subcontracted out? Yes _____ No _____

If yes, to whom? _____

Person(s) authorized to sign (certify) Payroll reports: 1) _____

2) _____

Identify work classification(s), base wage payment and total wage for each individual performing work on the project site. Attach additional sheets if necessary.

Work Classification from wage decision (include group number, if applicable)	Base Rate of Pay	Total Wage (including Fringe)

The fringe benefit payment will be (check A, B or C below):

(A) _____ paid directly (with the pay check) to each worker in the amount of $_____

(B) _____ paid to a Union benefit plan (or plans) in the amounts indicated below:

Complete chart below or attach schedule of fringe benefits.

Benefit	Amount
Vacation and Holiday	
Union Dues	
Health and Welfare Benefits	
Pension	
Annuity	
Other (Identify)	

Benefit funds are deposited into accounts maintained by: _____

Address: _____

Telephone: (____) _____-_____ Acct. #: (____) _____-_____

(C) _____ paid to an unfunded benefit plan (or plans) in the amounts indicated below:
*****If requested, copies of benefit plans to be submitted for review/approval.*****

Benefit	Amount
Pension	
Medical	
Dental	
Other (Identify)	

Benefit funds are deposited into accounts maintained by: _____

Address: _____

Telephone: (____) _____-_____ Acct. #: _____

Is this a sole proprietorship or partnership business? Yes _____ No _____

Caucasion Owned – WBE _____ MBE _____

_____
Owner/Principal Officer Name (Please Print)

_____ _____
Signature Date

SUBCONTRACTOR REQUEST FORM

Bid for: _____

Bid of: _____

Bid date: _____

1. Proposed subcontractor's name:

_____

_____

2. Proposed subcontractor's address:

_____

_____

3. Proposed Subcontractor's phone number:

_____

4. Description of work to be performed by proposed subcontractor:

_____

_____

_____

_____

5. Attach a schedule of proposed subcontract work including desired award date, milestones, completion date, and manpower and equipment loadings.

6. Attach proposed subcontractor's qualifications:
   a. Prior experience with similar work including client and/or Fluor references.
   b. Licenses, certificates and registrations held by proposed subcontractor that are required for (or pertain to) the work to be performed.
   c. Subcontractor organization for above work including names and résumés of key personnel.
   d. Data that shows that the proposed subcontractor has adequate manpower and equipment available for the work.

e. Subcontractor's safety program and statistics.
f. Most recent annual report, certificate of payment behavior, etc.

7. Bidder agrees, if awarded, that it will:
   a. Include all applicable contract requirements in its contract with proposed subcontractor.
   b. Provide subcontractor with all information that it receives on site work rules, safety requirements and other work conditions.
   c. Provide subcontractor's completed insurance certificate to Fluor prior to mobilization of subcontractor at site.
   d. Retain full responsibility for the performance of the above referenced contract.
   e. Provide subcontractor with all information that it receives on Business Conduct and Ethics Expectations for Suppliers and Contractors.

Bidder: _____

Signature: _____

Printed: _____

Title: _____

Date: _____

SUBCONTRACTOR PROFILE FORM

(If additional space is needed, please attach a separate sheet.)

Project Name: _____ Project No. _____

Subcontractor/Business Name: _____

Business Address: _____

Telephone: (____) _____-_____ Fax: (____) _____-_____

Federal Tax ID #: _____ State Tax ID #:_____

Our contract is with _____in the amount of $_____

for _____.
(identify specific work to be performed)

Will any work be subcontracted out? Yes _____ No _____

If yes, to whom? _____

Person(s) authorized to sign (certify) Payroll reports: 1) _____

2) _____

Identify work classification(s), base wage payment and total wage for each individual performing work on the project site. Attach additional sheets if necessary.

Work Classification from wage decision (include group number, if applicable)	Base Rate of Pay	Total Wage (including Fringe)

The fringe benefit payment will be (check A, B or C below):

(A) _____ paid directly (with the pay check) to each worker in the amount of $_____

(B) _____ paid to a Union benefit plan (or plans) in the amounts indicated below:

Complete chart below or attach schedule of fringe benefits.

Benefit	Amount
Vacation and Holiday	
Union Dues	
Health and Welfare Benefits	
Pension	
Annuity	
Other (Identify)	

Benefit funds are deposited into accounts maintained by: _____

Address: _____

Telephone: (____) _____-_____ Acct. #: (____) _____-_____

(C) _____ paid to an unfunded benefit plan (or plans) in the amounts indicated below:
*****If requested, copies of benefit plans to be submitted for review/approval.*****

Benefit	Amount
Pension	
Medical	
Dental	
Other (Identify)	

Benefit funds are deposited into accounts maintained by: _____

Address: _____

Telephone: (____) _____-_____ Acct. #: _____

Is this a sole proprietorship or partnership business? Yes _____ No _____

Caucasion Owned – WBE _____ MBE _____

_____
Owner/Principal Officer Name (Please Print)

_____ _____
Signature Date

NON-COLLUSION AFFIDAVIT

The undersigned bidder or agent, being duly sworn on oath, says that he has not, nor has any other member, representative, or agent of the firm, company, corporation or partnership represented by him, entered into any combination, collusion or agreement with any person relative to the price to be bid by anyone at such letting nor to prevent any person from bidding nor to induce anyone to refrain from bidding, and that this bid is made without reference to any other bid and without any agreement, understanding or combination with any other person in reference to such bidding.

He further says that no person or persons, firms, or corporation has, have or will receive directly or indirectly, any rebate, fee, gift, commission or thing of value on account of such sale.

OATH AND AFFIRMATION

I affirm under the penalties of perjury that the foregoing facts and information are true and correct to the best of my knowledge and belief.

Dated at _____ this ____ day of _____, 20 ____.

_____
Name of Organization

_____
Authorized Signature/Title

State of _____

City/County of _____ SS:

The foregoing instrument was acknowledged before me this ____ day of _____, 20 ____, by _____.

_____
Notary Public

My Commission expires: _____.

AFFIDAVIT CONCERNING EMPLOYMENT OF UNAUTHORIZED ALIENS

I am a duly authorized officer of _____. ("Contractor") and I hereby certify that as of the date of this Affidavit, Contractor does not employ any "unauthorized aliens" as that term is defined in 8 U.S.C 1324a(h)(3).

I AFFIRM UNDER THE PENALTIES FOR PERJURY THAT THE FOREGOING REPRESENTATIONS ARE TRUE AND ACCURATE.

Date: _____

By:_____

Printed Name:_____

NOTE: 8 U.S.C 1324a(h)(3) defines an unauthorized alien as an alien that is not at the time of employment either (a) an alien lawfully admitted for permanent residence, or (b) authorized to be so employed by this chapter or by the Attorney General.

CERTIFICATION REGARDING DEBARMENT, SUSPENSION, & OTHER RESPONSIBILITY MATTERS

1. The prospective primary participant certifies to the best of its knowledge and belief, that it and its principals:
   A. Are not presently debarred, suspended, proposed for debarment, declared ineligible or voluntarily excluded from covered transactions by any Federal department or agency.
   B. Have not within a 3-year period preceding this proposal been convicted of or had a civil judgment rendered against them for commission of fraud or a criminal offense in connection with obtaining, attempting to obtain, or performing a public (Federal, State or Local) transaction or contract under a public transaction; violation of Federal or State antitrust statutes or commission of embezzlement, theft, forgery, bribery, falsification or destruction of records, making false statements, or receiving stolen property.
   C. Are not presently indicted for or otherwise criminally or civilly charged by a governmental entity (Federal, tate or Local) with commission of any of the offenses enumerated in paragraph 1.b. of this certification; and
   D. Have not within a 3-year period preceding this application/proposal had one or more public transactions (Federal, State or Local) terminated for cause or default.
2. Where the prospective primary participant is unable to certify to any of the statements in this certification, such prospective participant shall attach an explanation to this proposal.

CERTIFICATE OF NON-SEGREGATED FACILITIES

The Company certifies that he does not maintain or provide for his employees any segregated facilities at any of his establishments, and that he does not permit his employees to perform their services at any location, under his control, where segregated facilities are maintained. The Company certifies further that he will not maintain or provide for his employees any segregated facilities at any of his establishments, and that he will not permit control where segregated facilities are maintained. The Company agrees that a breach of this certification will be a violation of the Equal Opportunity clause in any contract resulting from contracts with the Department of Community Development. As used in this certification, the "segregated facilities" means any wait in rooms, work area, restrooms and washrooms, restaurants and other eating areas, time clocks, locker rooms and other storage or dressing areas, transportation, and housing facilities provided for employees which are segregated by directive or are in fact segregated on the basis of race, color, religion, or national origin, because of habit, local custom, or otherwise. The Company agrees that (except obtained identical certification from proposed subcontractors for specific time periods) he will obtain identical certification from proposed subcontractors prior to award of subcontracts exceeding $10,000.00 which are not exempt from the provisions of the Equal Opportunity clause, and that he will retain such certifications in his files.

NOTE: The penalty for making false statements in offers is prescribed in 18 U.S.C. 1001

_____
Company Name

_____
Company Address

_____
City, State, Zip

_____
Authorized Signature / Date

_____
Title

SECTION 3 BUSINESS CONCERN CONTRACTOR VERIFICATION

Section 3 of the Housing and Urban Development Act of 1968, as amended, is aimed at directing economic assistance to low- and very low-income persons who live in the City of Muncie (Section 3 residents), and to business concerns which provide economic opportunities to low- and very low-income City of Muncie residents (Section 3 business concerns). Under the provisions of Section 3, businesses who qualify as Section 3 business concerns may be eligible for preference in awarding contracts. A business meeting one of the following three criteria is eligible for designation as a Section 3 Business Concern. Please indicate which of the three criteria applies to your business and provide documentation as indicated.

_____ 1. 51% or more of the business is owned by low-income City of Muncie residents.

documentation: owner(s) tax return(s)

_____ 2. At least 30% of the business's permanent, full-time employees are (or were within three years of the date of first employment with the business) low-income City of Muncie residents.

documentation: employee(s) tax returns for indicated period

_____ 3. The business awards at least 25% of the dollar amount of all subcontracts to businesses that meet either of the first two criteria.

documentation: sub-tier contract amounts of businesses that meet either of the first two criteria (specify)

or

_____ The business does not meet any of the above three criteria and is ineligible for Section 3 preference.

_____
Signature of Contractor

Name: _____

Company _____

Address: _____

City/State/Zip: _____

Phone: _____

SECTION 3: FORM A
Estimated Workforce Breakdown

Project Location:_____

Business Name:_____

Agent:_____ Date:_____

Are you an approved Section 3 Business Concern with the City of Muncie: ☐ Yes ☐ No

Are you a WBE/MBE Business Concern with the City of Muncie: ☐ Yes ☐ No

<u>This estimated workforce breakdown is mandatory for any business claiming Section 3 status and required before the issuance of any Service Agreement and/or Notice to Proceed.</u>

PART 1: If claiming Section 3 by sub-contracting at least 25% of the total project award to an approved Section 3 business concern(s), list the business(es) below:

_____

If this subcontractor(s) is not approved with Community Development, a Section 3 Business Application is available at the office (300 N. High St., Muncie, IN 47305)

PART 2: Estimated Workforce Breakdown (**THIS PART IS MANDATORY**)

Job Category	Total Estimated Positions Needed for Project	# Positions Occupied by Permanent Employees	# Positions Not Occupied*	# Positions to be filled with Section 3 Residents*
Professionals				
Technicians				
Office/Clerical				
Officials/Managers				
Sales				
Craft Workers (skilled)				
Operatives (semi-skilled)				
Laborers (unskilled)				
Service Workers				
Other (List)				
Total:				

***Number of Positions Not Occupied:** Businesses with positions not occupied and those positions need to be filled, should utilize Part 4: Compliance Methods to facilitate Section 3 compliance.

***Section 3 Resident:** Public housing resident or resident of Muncie who qualifies as a low-income person. HUD defines a low-income person as one whose household income does not exceed 80% of the median income for the region, with adjustments for family size.

PART 3:

1. Estimated total dollar amount of construction contract (Bid Amount):
   $_____
2. Estimated total dollar amount of construction contract awarded to Section 3 Businesses:
   $_____

PART 4: Compliance Methods

Listed below are methods that may be utilized to solicit applicants for vacant positions. **Select all that apply.** These methods comply with Section 3 efforts to direct employment and other economic opportunities, to the greatest extent feasible, toward low- and low-income persons, particularly those who are recipients of government assistance for housing.

1. Recruit low-income residents through: local advertising media, signs prominently displayed at the project site, contacts with community organizations and public or private agencies operating within Muncie in which the Section 3 covered program or project is located, or similar methods.

   ☐ Yes ☐ No

2. My Business will participate in a HUD program or other program which promotes the training or employment of Section 3 residents. Please provide evidence of such program.

   ☐ Yes ☐ No

3. My Business will participate in a HUD program or other program which promotes the award of contracts to business concerns which meet the definition of Section 3 business concerns. Please provide evidence of such program.

   ☐ Yes ☐ No

4. My Business will coordinate with the City's Housing Authority to locate qualified Section 3 Residents.

   ☐ Yes ☐ No

5. Other methods of Section 3 Compliance efforts are attached in writing.

   ☐ Yes ☐ No

I THE UNDERSIGNED HEREBY CERTIFY THAT ALL OF THE INFORMATION I HAVE PROVIDED ABOVE IS TRUE AND ACCURATE AND IF REQUESTED, I AGREE TO PROVIDE DOCUMENTATION CONFIRMING THE ACCURACY OF THIS INFORMATION.

Name:_____

Signature:_____

Date:_____

Instructions: For the Completion of Section 3 Forms A-C

Form A (Estimates): Turn in with your Bid Packet

1. Estimated workforce breakdown is mandatory for any business claiming Section 3 status. Therefore compliance is required before the issuance of any Construction Agreement and/or Notice to Proceed.
2. To the Greatest Extent Feasible new hires should be Section 3 Residents.
3. Your estimated workforce breakdown must be completed in accordance with the method your company selected during application to claim Section 3 status. Choose your method and fellow the steps below:
    a. 51% S-3 Resident owned business
        i. Complete Form A Parts 2-4
        ii. On Form A Part 2 include yourself. Example: A 2 person company, the 2 of you plus a full time new hire that is a laborer are doing 100% of the project, both of you are Section 3 residents and the new hire is a Section 3 resident. In column 1 you will place the correct number of employees next to the job categories that apply. In column 3 mark the job categories for the positions not occupied. In column 4 you will place a 1 in the row labeled Laborers. Use methods in Part 4 for your new hire.
    b. 25% of their dollar awarded subcontracted to qualified HUD Section 3 Businesses
        i. Complete Form A Parts 1-4
        ii. On Form A Part 2 you will complete the form in the same format as stated above only you will include the subcontractor(s). Note: If the subcontractor(s) are not approved Section 3 businesses with the city they must apply (instructions are in Part 1) before the notice to proceed for the project.
    c. 30% of your workforce within the past 3 years or currently are Section 3 Residents
        i. Complete Form A Parts 2-4
        ii. Complete Form A Part 2 in the same format as stated in the example above and include all of your employees.

Forms B & C (Actual): Turn in with your FINAL Invoice for Payment

1. Actual workforce breakdown is mandatory for any business claiming Section – 3 status. Therefore compliance is required before the issuance of final payment for Service.
2. To the Greatest Extent Feasible new hires should be Section 3 Residents.
3. **FORM B:** Your actual workforce breakdown must be completed in accordance with the method your company selected during application to claim Section 3 status. Choose your method and follow the steps below:
    a. 51% Section 3 Resident owned business
        i. Complete Form B Parts 2-4
        ii. Example: You own 100% of the company and are a Section 3 resident, you have 2 full time employees, 1 is a Section 3 resident, and 1 is not.
    b. 25% of their dollar awarded subcontracted to qualified HUD Section 3 Businesses
        i. Complete Form B Parts 1-4
        ii. On Form B Part 2 you will complete the form in the same format as stated above only you will include the subcontractor(s). Note: If the subcontractor(s) are not approved Section 3 businesses with the city they must apply (instructions are in Part 1) before the notice to proceed for the project is issued.
        iii. Complete Form C for every Section 3 worker the subcontractor had involved with the contract.
    c. 30% of your workforce within the past 3 years or currently are Section 3 Residents

        i. Complete Form B Parts 2-4
        ii. Complete Form B Part 2 in the same format as state in the example above and include all of your employees.
        iii. Complete Form C for every Section 3 worker involved with the contract.

4. FORM C: Certification for Section 3 Residents
    a. Complete this form for all Section 3 residents on the job site or employees involved with any aspect of the contract
    b. Complete this form for any new hires on the job or new hires involved with any aspect of the contract

CONTRACTOR'S BID FOR PUBLIC WORK – FORM 96

PART I

(To be completed for all bids. Please type or print)

Date:_____

1. Governmental Unit (Owner):_____
2. County :_____
3. Bidder (Firm):_____

   Address:_____

   City/State:_____
4. Telephone Number:_____
5. Agent of Bidder (if applicable):_____

Pursuant to notices given, the undersigned offers to furnish labor and/or material necessary to complete the public works project of _____ (Governmental Unit) in accordance with plans and specifications prepared by _____ _____ and dated _____ for the sum of _____ $_____

The undersigned further agrees to furnish a bond or certified check with this bid for an amount specified in the notice of the letting. If alternative bids apply, the undersigned submits a proposal for each in accordance with the notice. Any addendums attached will be specifically referenced at the applicable page.

If additional units of material included in the contract are needed, the cost of units must be the same as that shown in the original contract if accepted by the governmental unit. If the bid is to be awarded on a unit basis, the itemization of the units shall be shown on a separate attachment.

The contractor and his subcontractors, if any, shall not discriminate against or intimidate any employee, or applicant for employment, to be employed in the performance of this contract, with respect to any matter directly or indirectly related to employment because of race, religion, color, sex, national origin or ancestry. Breach of this covenant may be regarded as a material breach of the contract.

CERTIFICATION OF USE OF UNITED STATES STEEL PRODUCTS
(If applicable)

I, the undersigned bidder or agent as a contractor on a public works project, understand my statutory obligation to use steel products made in the United States (I.C. 5-16-8-2). I hereby certify that I and all subcontractors employed by me for this project will use U.S. steel products on this project if awarded. I understand that violations hereunder may result in forfeiture of contractual payments.

ACCEPTANCE

The above bid is accepted this _____ day of _____, _____, subject to the following conditions: _____

_____

Contracting Authority Members:

_____ _____

_____ _____

_____ _____

PART II
(For projects of $100,000 or more – IC 36-1-12-4)

Governmental Unit: _____

Bidder (Firm) _____

Date: _____

These statements to be submitted under oath by each bidder with and as a part of his bid. Attach additional pages for each section as needed.

SECTION I EXPERIENCE QUESTIONNAIRE

1. What public works projects has your organization completed for the period of one (1) year prior to the date of the current bid?

Contract Amount	Class of Work	Completion Date	Name and Address of Owner

2. What public works projects are now in process of construction by your organization?

Contract Amount	Class of Work	Expected Completion Date	Name and Address of Owner

3. Have you ever failed to complete any work awarded to you? _____ If so, where and why?

_____

_____

_____

4. List references from private firms for which you have performed work.

_____

_____

_____

_____

_____

SECTION II PLAN AND EQUIPMENT QUESTIONNAIRE

1. Explain your plan or layout for performing proposed work. (Examples could include a narrative of when you could begin work, complete the project, number of workers, etc. and any other information which you believe would enable the governmental unit to consider your bid.)

2. Please list the names and addresses of all subcontractors (i.e. persons or firms outside your own firm who have performed part of the work) that you have used on public works projects during the past five (5) years along with a brief description of the work done by each subcontractor.

3. If you intend to sublet any portion of the work, state the name and address of each subcontractor, equipment to be used by the subcontractor, and whether you will require a bond. However, if you are unable to currently provide a listing, please understand a listing must be provided prior to contract approval. Until the completion of the proposed project, you are under a continuing obligation to immediately notify the governmental unit in the event that you subsequently determine that you will use a subcontractor on the proposed project.

4. What equipment do you have available to use for the proposed project? Any equipment to be used by subcontractors may also be required to be listed by the governmental unit.

5. Have you entered into contracts or received offers for all materials which substantiate the prices used in preparing your proposal? If not, please explain the rationale used which would corroborate the prices listed.

SECTION III CONTRACTOR'S FINANCIAL STATEMENT

Attachment of bidder's financial statement is mandatory. Any bid submitted without said financial statement as required by statute shall thereby be rendered invalid. The financial statement provided hereunder to the governing body awarding the contract must be specific enough in detail so that said governing body can make a proper determination of the bidder's capability for completing the project if awarded.

SECTION IV CONTRACTOR'S NON – COLLUSION AFFIDAVIT

The undersigned bidder or agent, being duly sworn on oath, says that he has not, nor has any other member, representative, or agent of the firm, company, corporation or partnership represented by him, entered into any combination, collusion or agreement with any person relative to the price to be bid by anyone at such letting nor to prevent any person from bidding nor to include anyone to refrain from bidding, and that this bid is made without reference to any other bid and without any agreement, understanding or combination with any other person in reference to such bidding.

He further says that no person or persons, firms, or corporation has, have or will receive directly or indirectly, any rebate, fee, gift, commission or thing of value on account of such sale.

SECTION V OATH AND AFFIRMATION

I HEREBY AFFIRM UNDER THE PENALTIES FOR PERJURY THAT THE FACTS AND INFORMATION CONTAINED IN THE FOREGOING BID FOR PUBLIC WORKS ARE TRUE AND CORRECT.

Dated at _____ this _____ day of _____, _____

_____
(Name of Organization)

By_____

_____
(Title of Person Signing)

ACKNOWLEDGEMENT

STATE OF _____)
) ss
COUNTY OF_____)

Before me, a Notary Public, personally appeared the above-named _____ and

swore that the statements contained in the foregoing document are true and correct.

Subscribed and sworn to before me this _____ day of _____, _____.

_____
Notary Public

My Commission Expires:_____

County of Residence:_____

Form No. 96 (Revised 2005)

BID OF

_____
(Contractor)

_____
(Address)

_____

FOR

PUBLIC WORKS PROJECTS

OF

_____

_____

_____

Filed _____, _____

Action taken _____

_____

Contractor's Financial Statement

Submitted by_____ ☐ A Corporation ☐ A Co-partnership ☐ An Individual

with principal office at _____

To_____

ASSETS	Dollars	Cts.
1. Cash: (a) On Hand $ _____ (b) In bank $ _____ (c) Eslewhere $ _____		
2. Notes receivable (a) Due within 90 days		
(b) Due after 90 days		
(c) Past Due		
3. Accounts payable from completed contracts, exclusive of calims not approved for payment		
4. Sums earned on uncompleted contracts as shown by engineer' or architects estimate		
(a) Amount receivable from deducting retainage		
(b) Retainage to dade, due upon completion of contracts		
5. Accounts receibable from sources other than construction contracts		
6. Deposits for bids or other guarantees: (a) Recoverable within 90 days		
(b) Recoverable after 90 days		
7. Interest accured on loans, securities, etc.		
8. Real estate: (a) Used for business purposes		
(b) Not used for business purposes		
9. Stocks and bonds: (a) Listed – present market value		
(b) Unlisted – present value		
10. Materials in stock not included in Item 4 (a) For uncompleted contracts (present value)		
(b) Other materials (present value)		
11. Equipment, book value		
12. Furniture and fixtures, book value		
13. Other assets		
Total assets		
LIABILITIES		
1. Note payable: (a) To banks regular		
(b) To banks for certified checks		
(c) To others for equipment obligations		
(d) To other exclusive of equipment obligations		
2. Accounts Payable: (a) Not past due		
(b) Past due		
3. Real estate encumbrances		
4. Other liabilities		
5. Reserves		
6. Capital stock paid up: (a) Common		
(b) Common		
(c) Perferred		
(d) Perferred		
7 Surplus (net worth)		
Total liabilities		
CONTINGENT LIABILITIES		
1. Liability on notes receivable, discounted or sold		
2. Liability on accounts receivable, pledged, assigned or sold		
3. Liability as bondsman		
4. Liability as guarantor on contracts or on accounts of others		
5. Other contingent liabilities		
Total contingent liabilities		

DETAILS RELATIVE TO ASSETS

1	Cash	(a)	on hand_____	$_____
		(b)	deposited in banks named below_____	$_____
		(c)	elsewhere – (state where)_____	$_____

NAME OF BANK	LOCATION	DEPOSIT IN NAME OF	AMOUNT

2	Notes receivable	(a)	due within 90 days_____	$_____
		(b)	due after 90 days_____	$_____
		(c)	past due_____	$_____

RECEIVABLE FROM: NAME AND ADDRESS	FOR WHAT	DATE OF MATURITY	HOW SECURED	AMOUNT

Have any of the above been discounted or sold?_____If so, state amount, to whom, and reason _____

_____

_____

3 *	Accounts receivable from completed contracts exclusive of claims not approved for payment	$_____

NAME AND ADDRESS OF OWNER	NATURE OF CONTRACT	AMOUNT OF CONTRACT	AMOUNT RECEIVABLE

Have any of the above been assigned, sold or pledged?_____If so, state amount, to whom, and reason _____

_____

_____

4 *	Sums earned on uncompleted contracts, as shown by engineer's or architect's estimate:		
	(a)	Amount receivable after deducting retainage _____	$_____
	(b)	Retainage to date due upon completion of contract_____	$_____

DESIGNATION OF CONTRACT AND NAME AND ADDRESS OF OWNER	AMOUNT OF CONTRACT	AMOUNT EARNED	AMOUNT RECEIVED	RETAINAGE		AMOUNT EX-CLUSIVE OF RETAINAGE
				WHEN DUE	AMOUNT	

Have any of the above been sold, assigned, or pledged? _____ If so, state amount, to whom, and reason_____

_____

_____

*List separately each item amounting to 10 percent or more of the total and combine the remainder

5 * Accounts receivable not from construction contracts_____ $_____

RECEIVABLE FROM: NAME AND ADDRESS	FOR WHAT	WHEN DUE	AMOUNT

What amount, if any, is past due_____ $_____

6 Deposits with bids or otherwise guarantees_____ $_____

DEPOSITED WITH: NAME AND ADDRESS	FOR WHAT	WHEN RECEIVABLE	AMOUNT

7 Interest accrued on loans, securities, etc._____ $_____

ON WHAT ACCRUED	TO BE PAID WHEN	AMOUNT

8 Real estate book value
(a) Used for business purposes_____ $_____
(b) Not used for business purposes_____ $_____

DESCRIPTION OF PROPERTY	IMPROVEMENTS		TOTAL BOOK VALUE
	NATURE OF IMPROVEMENTS	BOOK VALUE	
1			
2			
3			
4			
5			
6			
7			

LOCATION	HELD IN WHOSE NAME	ASSESSED VALUE	AMOUNT OF EMCUMBRANCES
1			
2			
3			
4			
5			
6			
7			

List separately each item amounting to 10 percent or more of the total and combine the remainder.

9	Stocks and Bonds	(a) Listed – present market value_____ $_____
		(b) Unlisted – present market value_____ $_____

	DESCRIPTION	ISSUING COMPANY	LAST INT. OR DIV. PAID		PAR VALUE	PRESENT MARKET VALUE	QUAN-TITY	AMOUNT
			DATE	%				
1								
2								
3								
4								
5								
6								
7								

	WHO HAS POSSESSION	IF ANY ARE PLEDGED OR IN ESCROW, STATE FOR WHOM AND REASON	AMOUNT PLEDGED OR IN ESCROW
1			
2			
3			
4			
5			
6			
7			

10	Materials in stock and not included in Item 4, Assets:
	(a) For use on uncompleted contracts (present value)_____ $_____
	(b) Other materials (present value)_____ $_____

DESCRIPTION OF MATERIAL	QUANTITY	PRESENT VALUE	
		FOR UNCOM-PLETED CONTRACTS	OTHER MATERIALS

11*	Equipment at book value_____ $_____

QUAN-TITY	DESCRIPTION AND CAPACITY OF ITEMS	AGE OF ITEMS	PRUCHASE PRICE	DEPRECIATION CHARGED OFF	BOOK VALUE

Are there any liens against the above? _____ If so, state total amount_____ $_____

* If two or more items are lumped above, give the sum of their ages.

DETAILS RELATIVE TO ASSETS (Continued)

12	Furniture and fixtures at book value	$
13	Other assets	$

DESCRIPTION	AMOUNT

TOTAL ASSETS $

DETAILS RELATIVE TO LIABILITIES

1	Notes Payable	(a) To banks, regular	$
		(b) To banks for certified checks	$
		(c) To others for equipment obligations	$
		(d) To others exclusive of equipment obligations	$

TO WHOM: NAME AND ADDRESS	WHAT SECURITY	WHEN DUE	AMOUNT

2	Accounts Payable	(a) Not past due	$
		(b) Past due	$

TO WHOM: NAME AND ADDRESS	FOR WHAT	DATE PAYABLE	AMOUNT

3	Real estate encumbrances (See Item 8, Assets)	$
4	Other Liabilities	$

DESCRIPTION	AMOUNT

5	Reserves	$

INTEREST	INSURANCE	BLDGS. & FIXT.	PLANT DEPR.	TAXES	BAD DEBTS		
$	$	$	$	$	$	$	$

6	Capital stock paid	(a) Common	$
		(b) Preferred	$
7	Surplus		$

TOTAL LIABILITIES $

If corporation answer this:

Amount for which incorporated_____

Capital paid in cash_____ $_____

When incorporated_____

In what state _____

Names and titles of all persons having authority to execute and receipt estimate vouchers and to conduct other business for the corporation, including its officers, the signatures of whom are legally binding.

_____

_____

_____

_____

_____

Do you have necessary "certificate of authority" to transact corporate business in this state, under the terms of Chapter 215, Acts of 1929, and acts amendatory thereto? _____

If a co-partnership answer this:

Date of organization_____

State whether co-partnership is general, limited or association_____

Give the manes, addresses and proportional interests of all parties:

Name	Address	Share
		$
		$
		$
		$
		$
		$
		$
		$
		$

The name of the partnership firm under which the above partners are operating is_____

_____

Give names and titles of all persons having authority to execute and receipt estimate vouchers and to conduct other business for the partnership, the signatures of whom are legally binding.

_____

The undersigned hereby declares that the foregoing is a true statement of the financial condition of the individual co-partnership or corporation herein first named, as of the date herein first given; that this statement is for the express purpose of inducing the party to whom it is submitted to award the submitter a contract; and that any depository, vendor or other agency herein named is hereby authorized to supply such party with any information necessary to verify this statement.

_____

Note: A co-partnership must firm name and address and signatures of all partners. A corporation must give full corporate name, signature of official and affix corporate seal.

_____

_____

_____

Affidavit for individual

STATE OF _____
COUNTY OF_____ { SS:

_____ being duly sworn, disposes and says that the forgoing financial statement, taken from his books, is a true and accurate statement of the financial condition as of the date thereof and that the answers to the foregoing interrogatories are true.

Subscribed and sworn to before me this

_____
(Member of firm must sign)

_____day of_____20____

_____
Notary Public

Affidavit for Co-partnership

STATE OF _____
COUNTY OF_____ { SS:

_____ being duly sworn, disposes and says that he is a member of the firm of _____; that he is familiar with the books of the said firm showing its financial condition; that the forgoing financial statement, taken from his books of said firm, is a true and accurate statement of the financial condition of the said firm as of the date thereof and that the answers to the foregoing interrogatories are true.

Subscribed and sworn to before me this

_____
(Member of firm must sign here)

_____day of_____20____

_____
Notary Public

Affidavit for Corporation

STATE OF _____
COUNTY OF_____ { SS:

_____being duly sworn, disposes and says that he is _____ of the_____; the corporation described in and which executed the foregoing statement, that he is familiar with the books of the said corporation showing its financial condition; that the forgoing financial statement, taken from his books of said corporation, is a true and accurate statement of the financial condition of the said corporation as of the date thereof and that the answers to the foregoing interrogatories are true.

Subscribed and sworn to before me this

_____
(Member of firm must sign here)

_____day of_____20____

_____
Notary Public